Table of Contents

FS-6300

User's Manual

Kyocera Laser Printer

Caution

NO LIABILITY IS ASSUMED FOR ANY DAMAGE CAUSED BY IMPROPER INSTALLATION.

Notice on Software

SOFTWARE USED WITH THIS PRINTER MUST SUPPORT THE PRINTER'S NATIVE MODE OR ONE OF ITS EMULATION MODES. The printer is factory set to emulate the PCL 6. The emulation mode can be changed by following the procedures described in *Chapter 2* in this manual.

Notice

The information in this manual is subject to change without notification. Additional pages may be inserted in future editions. The user is asked to excuse any technical inaccuracies or typographical errors in the present edition.

No responsibility is assumed if accidents occur while the user is following the instructions in this manual. No responsibility is assumed for defects in the printer's firmware (contents of its read-only memory).

This manual, any copyrightable subject matter sold or provided with or in connection with the sale of the page printer, are protected by copyright. All rights are reserved. Copying or other reproduction of all or part of this manual, any copyrightable subject matter without the prior written consent of Kyocera Corporation is prohibited. Any copies made of all or part of this manual, any copyrightable subject must contain the same copyright notice as the material from which the copying is done.

Regarding Tradenames

PRESCRIBE is a registered trademark of Kyocera Corporation. PRESCRIBE 2, PRESCRIBE 2e, KPDL, and KIR (Kyocera Image Refinement) are trademarks of Kyocera Corporation.

Diablo 630 is a product of Xerox Corporation. IBM Proprinter X24E is a product of International Business Machines Corporation. Epson LQ-850 is a product of Seiko Epson Corporation.

Hewlett-Packard, PCL, and PJL are registered trademarks of Hewlett-Packard Company. Centronics is a trade name of Centronics Data Computer Corp. PostScript is a registered trademark of Adobe Systems Incorporated. Macintosh is a registered trademark of Apple computer, Inc. AppleTalk is a trademark of Apple Computer, Inc. Microsoft, Windows, and MS-DOS are registered trademarks of Microsoft Corporation. PowerPC is a trademark of International Business Machines Corporation. ENERGY STAR is U.S. registered mark. Adobe and Acrobat are trademarks of Adobe Systems Incorporated which may be registered in certain jurisdictions.

This Kyocera page printer uses PeerlessPrintXL to provide the HP LaserJet compatible PCL6 language emulation. PeerlessPrintXL is a trademark of The Peerless Group, Redondo Beach, CA 90278, U.S.A.

This product was developed using the Tornado™ Real Time Operating System and Tools from Wind River Systems.

© 1999 by Kyocera Corporation. All rights reserved, Revision 1.1., February 2001

IBM PROGRAM LICENSE AGREEMENT

THE DEVICE YOU HAVE PURCHASED CONTAINS ONE OR MORE SOFTWARE PROGRAMS ("PROGRAMS") WHICH BELONG TO INTERNATIONAL BUSINESS MACHINES CORPORATION ("IBM"). THIS DOCUMENT DEFINES THE TERMS AND CONDITIONS UNDER WHICH THE SOFTWARE IS BEING LICENSED TO YOU BY IBM. IF YOU DO NOT AGREE WITH THE TERMS AND CONDITIONS OF THIS LICENSE, THEN WITHIN 14 DAYS AFTER YOUR ACQUISITION OF THE DEVICE YOU MAY RETURN THE DEVICE FOR A FULL REFUND. IF YOU DO NOT SO RETURN THE DEVICE WITHIN THE 14 DAYS, THEN YOU WILL BE ASSUMED TO HAVE AGREED TO THESE TERMS AND CONDITIONS.

The Programs are licensed not sold. IBM, or the applicable IBM country organization, grants you a license for the Programs only in the country where you acquired the Programs. You obtain no rights other than those granted you under this license.

The term "Programs" means the original and all whole or partial copies of it, including modified copies or portions merged into other programs. IBM retains title to the Programs. IBM owns, or has licensed from the owner, copyrights in the Programs.

1. License

Under this license, you may use the Programs only with the device on which they are installed and transfer possession of the Programs and the device to another party.

If you transfer the Programs, you must transfer a copy of this license and any other documentation to the other party. Your license is then terminated. The other party agrees to these terms and conditions by its first use of the Program.

You may not:

1) use, copy, modify, merge, or transfer copies of the Program except as provided in this license;

2) reverse assemble or reverse compile the Program; or

3) sublicense, rent, lease, or assign the Program.

2. Limited Warranty

The Programs are provided "AS IS."

THERE ARE NO OTHER WARRANTIES COVERING THE PROGRAMS (OR CONDITIONS), EXPRESS OR IMPLIED, INCLUDING, BUT NOT LIMITED TO, THE IMPLIED WARRANTIES OF MERCHANTABILITY AND FITNESS FOR A PARTICULAR PURPOSE.

Some jurisdictions do not allow the exclusion of implied warranties, so the above exclusion may not apply to you.

SUPPLEMENT TO AGREEMENT FOR SOFTWARE BUNDLING AND DISTRIBUTION FOR ALDC

3. Limitation of Remedies

IBM's entire liability under this license is the following;

1) For any claim (including fundamental breach), in any form, related in any way to this license, IBM's liability will be for actual damages only and will be limited to the greater of:

   a) the equivalent of U.S.$25,000 in your local currency; or

   b) IBM's then generally available license fee for the Program

This limitation will not apply to claims for bodily injury or damages to real or tangible personal property for which IBM is legally liable.

IBM will not be liable for any lost profits, lost savings, or any incidental damages or other economic consequential damages, even if IBM, or its authorized supplier, has been advised of the possibility of such damages. IBM will not be liable for any damages claimed by you based on any third party claim. This limitation of remedies also applies to any developer of Programs supplied to IBM. IBM's and the developer's limitations of remedies are not cumulative. Such developer is an intended beneficiary of this Section. Some jurisdictions do not allow these limitations or exclusions, so they may not apply to you.

4. General

You may terminate your license at any time. IBM may terminate your license if you fail to comply with the terms and conditions of this license. In either event, you must destroy all your copies of the Program. You are responsible for payment of any taxes, including personal property taxes, resulting from this license. Neither party may bring an action, regardless of form, more than two years after the cause of action arose. If you acquired the Program in the United States, this license is governed by the laws of the State of New York. If you acquired the Program in Canada, this license is governed by the laws of the Province of Ontario. Otherwise, this license is governed by the laws of the country in which you acquired the Program.

Typeface Trademark Acknowledgement

All resident fonts in this printer are licensed from Agfa Corporation.

Helvetica, Palatino and Times are registered trademarks of Linotype-Hell AG.

ITC Avant Garde Gothic, ITC Bookman, ITC ZapfChancery and ITC ZapfDingbats are registered trademarks of International Typeface Corporation.

Agfa Japan License Agreement Guidelines

1. "Software" shall mean the digitally encoded, machine readable, scalable outline data as encoded in a special format as well as the UFST Software.
2. You agree to accept a non-exclusive license to use the Software to reproduce and display weights, styles and versions of letters, numerals, characters and symbols ("Typefaces") solely for your own customary business or personal purposes at the address stated on the registration card you return to Agfa Japan. Under the terms of this License Agreement, you have the right to use the Fonts on up to three printers. If you need to have access to the fonts on more than three printers, you need to acquire a multi-user license agreement which can be obtained from Agfa Japan. Agfa Japan retains all rights, title and interest to the Software and Typefaces and no rights are granted to you other than a License to use the Software on the terms expressly set forth in this Agreement.

3. To protect proprietary rights of Agfa Japan, you agree to maintain the Software and other proprietary information concerning the Typefaces in strict confidence and to establish reasonable procedures regulating access to and use of the Software and Typefaces.
4. You agree not to duplicate or copy the Software or Typefaces, except that you may make one backup copy. You agree that any such copy shall contain the same proprietary notices as those appearing on the original.
5. This License shall continue until the last use of the Software and Typefaces, unless sooner terminated. This License may be terminated by Agfa Japan if you fail to comply with the terms of this License and such failure is not remedied within thirty (30) days after notice from Agfa Japan. When this License expires or is terminated, you shall either return to Agfa Japan or destroy all copies of the Software and Typefaces and documentation as requested.
6. You agree that you will not modify, alter, disassemble, decrypt, reverse engineer or decompile the Software.
7. Agfa Japan warrants that for ninety (90) days after delivery, the Software will perform in accordance with Agfa Japan-published specifications, and the diskette will be free from defects in material and workmanship. Agfa Japan does not warrant that the Software is free from all bugs, errors and omissions.

   THE PARTIES AGREE THAT ALL OTHER WARRANTIES, EXPRESSED OR IMPLIED, INCLUDING WARRANTIES OF FITNESS FOR A PARTICULAR PURPOSE AND MERCHANTABILITY, ARE EXCLUDED.
8. Your exclusive remedy and the sole liability of Agfa Japan in connection with the Software and Typefaces is repair or replacement of defective parts, upon their return to Agfa Japan.

   IN NO EVENT WILL AGFA JAPAN BE LIABLE FOR LOST PROFITS, LOST DATA, OR ANY OTHER INCIDENTAL OR CONSEQUENTIAL DAMAGES, OR ANY DAMAGES CAUSED BY ABUSE OR MISAPPLICATION OF THE SOFTWARE AND TYPEFACES.
9. New York, U.S.A. law governs this Agreement.
10. You shall not sublicense, sell, lease, or otherwise transfer the Software and/or Typefaces without the prior written consent of Agfa Japan.
11. Use, duplication or disclosure by the Government is subject to restrictions as set forth in the Rights in Technical Data and Computer Software clause at FAR 252-227-7013, subdivision (b)(3)(ii) or subparagraph (c)(1)(ii), as appropriate. Further use, duplication or disclosure is subject to restrictions applicable to restricted rights software as set forth in FAR 52.227-19 (c)(2).
12. YOU ACKNOWLEDGE THAT YOU HAVE READ THIS AGREEMENT, UNDERSTAND IT, AND AGREE TO BE BOUND BY ITS TERMS AND CONDITIONS. NEITHER PARTY SHALL BE BOUND BY ANY STATEMENT OR REPRESENTATION NOT CONTAINED IN THIS AGREEMENT. NO CHANGE IN THIS AGREEMENT IS EFFECTIVE UNLESS WRITTEN AND SIGNED BY PROPERLY AUTHORIZED REPRESENTATIVES OF EACH PARTY. BY OPENING THIS DISKETTE PACKAGE, YOU AGREE TO ACCEPT THE TERMS AND CONDITIONS OF THIS AGREEMENT.

Interface connectors

Important note on the interface connectors

Be sure to turn off printer power before connecting or disconnecting an interface cable* to the printer. For protection against static discharge which may be applied to the printer's internal electronics through the interface connector(s), keep any interface connector which is not in use capped using the protective cap supplied.

☞ **Use shielded interface cable.**

Safety information

Laser notice

The printer is certified as a Class I laser product conforming to the requirements of IEC 60825-1.

Caution: Laser Radiation when remove the Laser Scanner Unit Cover in the printer. AVOID DIRECT EXPOSURE TO BEAM.

Use of controls or adjustments or performance of procedures other than those specified herein may result in hazardous radiation exposure.

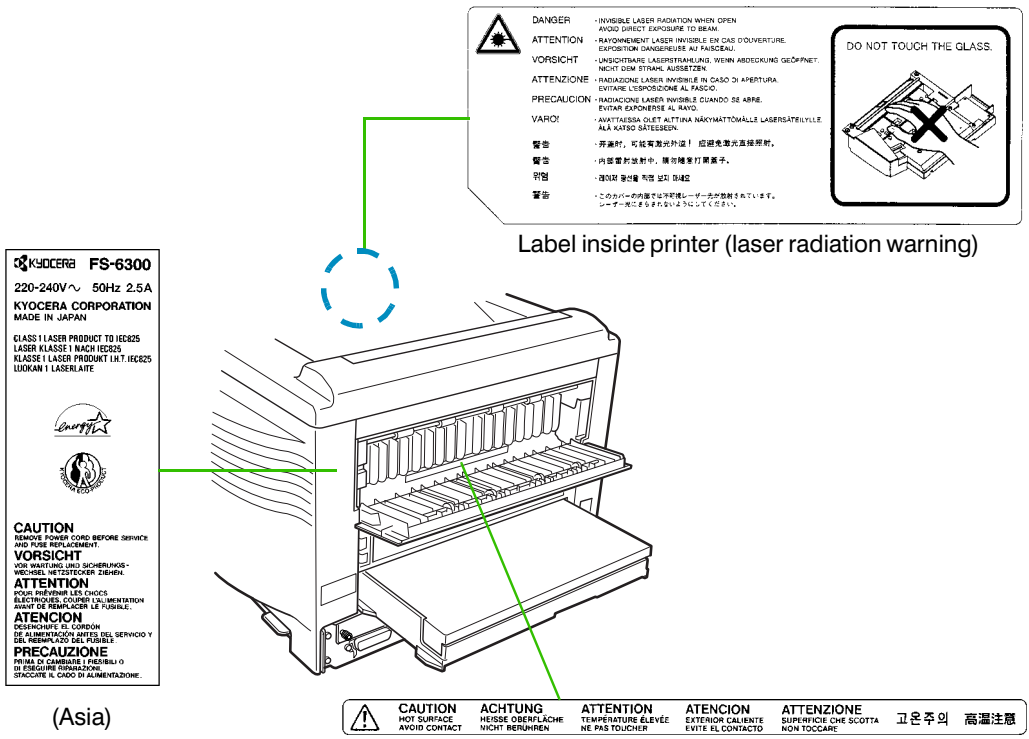

Label inside printer (laser radiation warning)

(Asia)

Label on the Printer's Rear Panel

Label Inside the Rear Cover

Ozone concentration

The printer generates ozone gas (O_3) which may concentrate in the place of installation and cause an unpleasant smell. To minimize concentration of ozone gas to less than 0.1 ppm, we recommend you not to install the printer in a confined area where ventilation is blocked.

IMPORTANT SAFEGUARDS

1. Read all of these instructions and save these instructions for later use.
2. Unplug this product from the wall outlet before cleaning.
3. Do not use this product near water.
4. Do not place this product on an unstable cart, stand, or table. The product may fall, causing serious damage to the product.
5. Slots and openings in the cabinet and the back are provided for ventilation to ensure reliable operation of the product and to protect it from overheating, these openings must not be blocked or covered. The openings should never be blocked by placing the product on a bed, sofa, rug, or other similar surface. This product should never be placed near or over a radiator or heat register. This product should not be placed in a built-in installation unless proper ventilation is provided.
6. This product is equipped with a 3-wire grounding type plug, a plug having a third (grounding) pin. This plug will only fit into a grounding-type power outlet. This is a safety feature. If you are unable to insert the plug into the outlet, contact your electrician to replace your obsolete outlet. Do not defeat the purpose of the grounding-type plug.
7. Do not allow anything to rest on the power cord. Do not locate this product where persons will walk on the cord.
8. If an extension cord is used with this product, make sure that the total of the ampere ratings on the products plugged into the extension cord do not exceed the extension cord ampere rating.
9. Never push objects of any kind into this product through cabinet slots as they may touch dangerous voltage points or short out parts that could result in a risk of fire or electric shock. Never spill liquid of any kind on the product.
10. Except as explained elsewhere in this manual, do not attempt to service this product yourself. Removing covers may expose you to dangerous voltage points or other risks. Refer all servicing in those compartments to service personnel.

11. Unplug this product from the wall outlet and refer servicing to qualified service personnel under the following conditions:

A —When the power cord or plug is damaged or frayed.
B— If liquid has been spilled into the product.
C— If the product has been exposed to rain or water.
D— If the product does not operate normally when the operating instructions are followed. Adjust only those controls that are covered by the operating instructions since improper adjustment of other controls may result in damage and will often require extensive work by a qualified technician to restore the product to normal operation.
E— If the product has been dropped or the cabinet has been damaged.

Safety & EMI Requirements

IEC	IEC60950:1991 (+A1+A2+A3+A4) / (IEC60825-1:1993)
CISPR	Publication 22

Disclaimer

We shall have no liability or responsibility to customers or any other person or entity with respect to any liability, loss or damage caused or alleged to be caused directly or indirectly by equipment sold or furnished by us, including but not limited to, any interruption of service, loss of business or anticipatory profits, or consequential damages resulting from the use or operation of the equipment or software.

Prolonged Non-Use and Moving the Printer

Prolonged Non-use

If you ever leave the printer unused for a long period of time, remove the power cord from the wall outlet.

We recommend you consult with your dealer about the additional actions you should take to avoid possible damages that may occur when the printer is used next time.

Moving the Printer

When you move the printer:

- Move it gently.
- Keep it as level as possible, to avoid spilling toner inside the printer.
- If you ship the printer, remove the developer unit and ship it separately. Be sure to consult your Kyocera dealer before attempting long-distance transportation of the printer.

Remove the developer unit as explained below.

☛ **The magnet roller of the developer unit includes a powerful magnet. Do not allow wrist watches, floppy disks, credit cards or magnetic cards near the roller.**

1. Open the printer's top cover all the way, and remove the toner container as gently as possible.

☛ **Keep the toner container as level as possible while removing.**

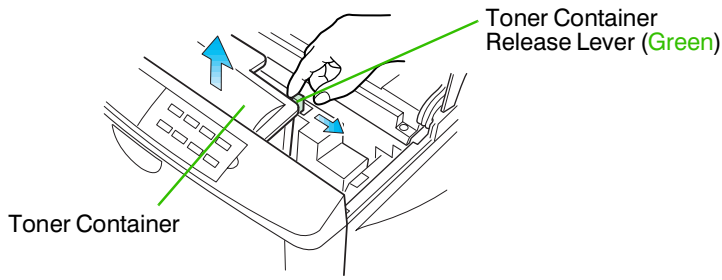

2. Remove the developer unit.

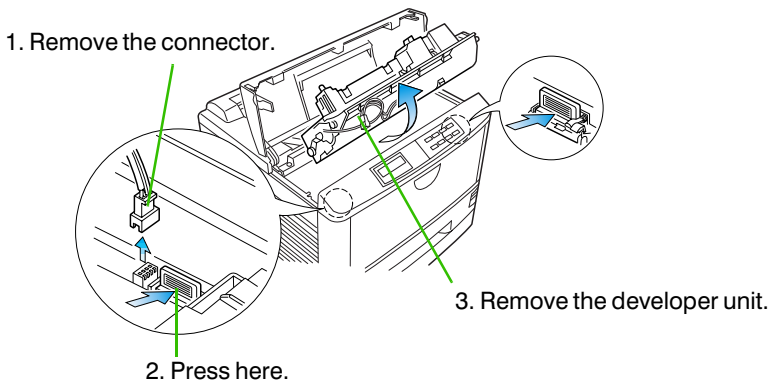

3. Place the developer unit in the protective package for transportation.

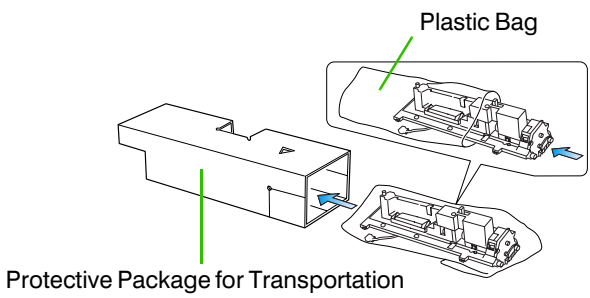

☛ **Place the toner container and waste toner bottle in the plastic bag included in the toner kit.**

ENERGY STAR®

As an ENERGY STAR Partner, Kyocera Corporation has determined that this product meets the ENERGY STAR guidelines for energy efficiency.

The basic objective of the ENERGY STAR Program is to reduce environmental pollution by encouraging the manufacture and sale of equipment that uses energy more efficiently.

This printer is equipped with a sleep timer function that conforms with the standards of the ENERGY STAR Program. This function makes it possible to reduce the amount of electrical power consumed by the printer. For maximum power savings, turn off the printer's power supply when not using the printer for extended periods of time.

For details on the sleep timer function and printer power consumption, refer to the instruction manual provided with the printer.

Initial settings of the sleep timer function and power saved using the sleep timer function:

Initial sleep mode setting	Power consumption in sleep mode
30 minutes (60 minutes)	18 W (45 W)

( ): ENERGY STAR program guideline

Kyocera ECO-PRODUCT

This product has been developed and manufactured with the express interest of reducing the impact on the environment.

Using Kyocera's innovative cartridge free technology, Kyocera has created an advanced printing system that does not require the wasteful replacement and disposal of a cartridge.

Introduction

The Kyocera laser printer has many extremely desirable features. It was designed to make a contribution to a cleaner environment as well as to represent the latest generation of page printer technology.

Maintenance Features

- **Long life modules**
  The main modules in this laser printer such as the drum, developer unit, and fuser unit have been designed for long life.

Print Engine Features

- **Superb print quality**
  With 600 dots-per-inch, the printout is close to typeset quality. Also, Kyocera Image Refinement (KIR) technology provides excellent sharpness and consistency.
- **High Speed**
  A4 sizes (landscape feed) typically print at the rate of 16 pages per minute. (Actual time varies according to page complexity)
- **Environmentally benign waste parts**
  The toner container is made out of a benign, flammable material. (Be sure to dispose of containers according to local laws and regulations.)
- **Large Paper Capacity**
  Approximately 250 sheets can be loaded into the paper cassettes, and about 100 sheets can be loaded into the MP tray.
- **Scalable Printing**
  This printer allows reductions between various paper sizes using the page setup function.

Software Features

- **Automatic media type selection function**
  The appropriate type of media can be selected automatically upon printing by setting media of various types (plain paper, transparencies, envelopes, etc.) in the paper tray or cassette in advance.

- **Wide Variety of available fonts**
  The printer comes with 80 PCL/PS compatible fonts installed.

- **Kyocera's own PRESCRIBE 2e printer language**
  Allows advanced graphic capabilities that allow you to print out any outline shape or solid form, as well as providing a variety of special effects such as patterned fills, gray-scale shading, a user accessible print image model, and multiple page orientations and print directions within the same page.

- **PDF417 two-dimensional bar code**
  The printer includes the capability that allows the user to implement the two-dimensional stacked bar code symbology, PDF417, or Portable Data File 417. This expanded functionality is achieved by using the PRESCRIBE 2e language commands.

- **Automatic rotation of fonts and graphics**
  Images and scalable fonts are automatically rotated to match the page orientation.

- **A wide variety of internal symbol sets**
  The printer supports most PCL 6 symbol sets.

- **Display of printer messages in any of four languages**
  English, French, German, or Italian. As an option it is also possible to download the messages in other languages. Please contact your Kyocera dealer.

- **Memory card slot for opinion fonts, macros, forms, etc.**
  Data in the memory card can be selectively read or written from the printer's control panel.

- **Simple Network Management Protocol (SNMP) compliance**
  Offers network managers complete open system network management.

- **Supports various network environments**
  Since the printer allows a network interface board, the printer can support a broader network environment. Also coming standard equipped with a bidirectional parallel interface conforming to the IEEE1284 standard, the printer automatically switches to the interface on which data is being input and prints that data.

- **Kyocera PrintMonitor**
  Provides network wide management of the Kyocera FS family of laser printers. Refer to the readme file located in the Kyocera Digital Library CD-ROM (included with the printer) for details.

Other Features

- **Large Memory Capacity**
  This printer comes standards equipped with 4 MB of memory. This can be extended up to 68 MB of memory through optional expansion of memory.

Options

The following options are available for this printer.

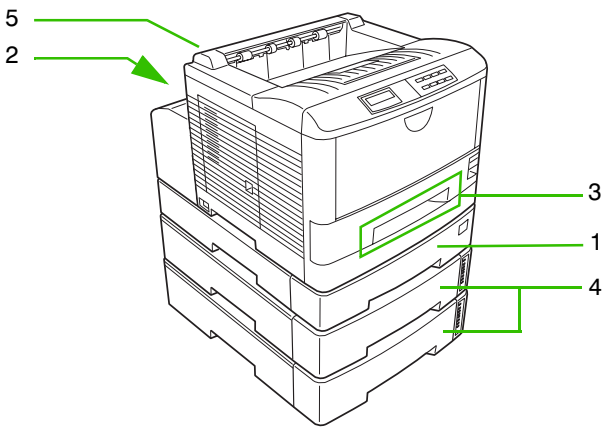

1	**DU-25 (Duplex unit)** Performs duplex printing. Attaches to the bottom of the printer.	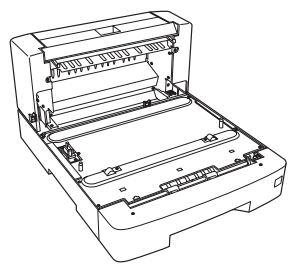
2	**IB-10 (Serial interface board kit)** Enables connection to a computer with a RS-232C or RS-422a standard serial interface.	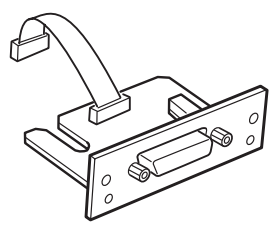

3	**PA-25 (Paper path adaptor)** Necessary when optional feeders and duplex units are attached to the printer. (The point of attachment varies depending on the option installed.)	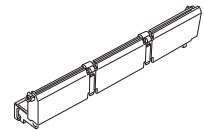
4	**PF-26 (Paper feeder)** Holds approximately 500 sheets of paper. Up to two paper feeders can be attached to the bottom of the printer unit.	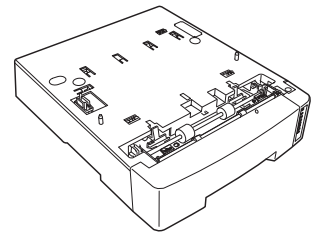
5	**PT-3 (Face-up tray)** This is a face-up tray. It attaches to the rear of the printer.	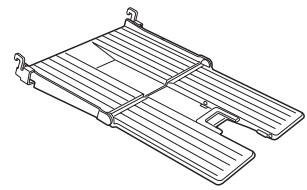

Guide to the Manual

Installation Manual

The *Installation Manual* is the booklet included with this printer. The Installation Manual guides you through the following topics:

- Installation
- Printer basic operation

CD-ROM (Kyocera Digital Library)

The CD-ROM supplied contains the printer User's Manual (this manual). PRESCRIBE 2e Programming Manual, and PDF417 Two Dimensional Bar Code Implementation Manual. To gain access to these documents, insert the CD-ROM into the appropriate drive and follow the instructions on the insert accompanying the CD-ROM. To view these documents, you need the Adobe Acrobat software installed in your computer. For details, read the instructions on the CD-ROM package.

This User's Manual guides you through topics concerning the operations and maintenance of the printer.

User's Manual (on CD-ROM):

- Installation
- Printer operation
- Control panel operations
- Fonts
- Maintenance and troubleshooting

PRESCRIBE 2e Programming Manual (on CD-ROM):

- PRESCRIBE 2e command reference
- Fonts
- Bar codes
- Printer permanent parameters
- Emulation

PDF417 Two Dimensional Bar Code Implementation Manual (on CD-ROM):

- PDF417 overview
- PRESCRIBE 2 commands for PDF417

Table of Contents

Chapter 1 Installing the Printer 1-1

1.1. Positioning the Printer 1-1

Clearance 1-1
Places to Avoid 1-2
Basic requirements 1-2
Power Supply 1-3

1.2. Unpacking and Inspection 1-4

List of shipped components 1-4

1.3. Names of Parts 1-6

Front View 1-6
Interior View 1-7
Rear View 1-7

1.4. Setting Up and Interfacing 1-8

1—Open the Top Cover 1-9
2—Install the Toner Container 1-9
3—Close the Top Cover 1-10
4—Install the Waste Toner Bottle 1-10
5—Adjusting the Paper Guides of the Paper Cassette 1-12
6—Add Paper 1-14
7—Open the Paper Stopper on the Face-down Output Tray (if required) 1-16
8—Install the Face-up Output Tray (sold separately) 1-16
9—Connect the Printer to the Computer 1-16
10—Attach the Power Cord 1-17
11—Print a Status Page 1-17
12—Replacing the control panel 1-18
13—Set the Emulation Mode 1-18
14—Install the Printer Driver 1-19

1.5. MP (Multi-Purpose) Tray Feeding 1-23

Feeding from the MP Tray and Associated Settings 1-23
Setting Each Mode 1-25

1.6. Memory Card 1-27

Handling a Memory Card 1-28

1.7. Memory Expansion Installation 1-29
Removing the Main Circuit Board 1-29
DIMM to be used 1-31
Installing and Removing The DIMM 1-31
Testing the Expansion Memory 1-32

Chapter 2 Operating the Laser Printer 2-1

2.1. Control Panel 2-1
Message Display 2-2
Interface Indicator 2-2
Resolution Indicator 2-2
Paper Size Indicator 2-3
Copy Indicator 2-3
Symbolic Indicators 2-4
Control Keys 2-5

2.2. Operating Procedures 2-6
Operating Precautions 2-6
Switching Power On 2-6
Basic Printing Operations 2-7
Selecting the Output Tray 2-7
Feed Selection 2-8
Switching Online/Offline 2-8
Canceling Printing 2-9
Status Printout 2-10
Sample Status Page 2-11
Form Feed 2-13

2.3. Mode Selection Menu 2-14
Mode Selection Menu List 2-14

2.4. Configuring Interfaces 2-17
Parallel Interface 2-17

2.5. Emulation Selection 2-18

2.6. Reduction (Page Set) 2-19

2.7. RAM DISK 2-21
Setting the RAM DISK Size 2-21
RAM DISK Operations 2-21

2.8. Memory Card....2-22
Inserting the Memory Card.... 2-22
Operating a Memory Card.... 2-23
Reading Fonts from a Memory Card 2-23
Reading Macros from a Memory Card.... 2-24
Reading Data (Partitions) from a Memory Card.... 2-24
Writing Data (Partitions) to a Memory Card.... 2-25
Deleting Data from a Memory Card 2-26
Formatting a Memory Card 2-27
Printing a List of Data Names (Partitions).... 2-28

2.9. Setting the Paper Type 2-29
Making Settings.... 2-30
Paper Type User Setting 2-30

2.10. Adjusting the Print Density....2-32
Selecting Print Density Mode 2-32

2.11. Sleep Timer Setting 2-33
Selecting Sleep Timer Mode.... 2-33

2.12. Dumping Received Data....2-34
Selecting Dump Received Data Mode.... 2-34

2.13. KIR Level 2-35
Selecting KIR Mode 2-37

2.14. Ecoprint Mode....2-38
Selecting Ecoprint Mode.... 2-38

2.15. Resource Protection....2-39
Selecting Resource Protection Mode.... 2-39

2.16. Setting the Audio Warning (Buzzer) 2-40
Selecting Buzzer Mode 2-41

Chapter 3 Fonts.... 3-1

3.1. Internal Fonts....3-1

3.2. List of Fonts....3-2

Chapter 4 Maintenance 4-1

4.1. Toner Kit Replacement 4-1
Toner Kit to be Used 4-2
Supplying Toner 4-2
Replace the Waste Toner Bottle 4-5

4.2. Cleaning 4-7
Main Charger Unit 4-7

Chapter 5 Troubleshooting 5-1

5.1. General Guide 5-1

5.2. Power Problems 5-2

5.3. Interface Problems 5-2

5.4. Print Quality Problems 5-3
Completely blank printout 5-3
All-black printout 5-3
Dropouts, horizontal streaks, stray dots 5-4
Black or white vertical streaks 5-4
The image is smeared 5-5
Faint or blurred printing 5-5
Grey background 5-6
Dirt on the top edge or back of the paper 5-7
Characters out of position 5-7

5.5. Indicators and Messages 5-8
Indicators 5-8
Maintenance Messages 5-9
Error Messages 5-11

5.6. Correcting a Paper Jam 5-15

Appendix A Printer Specifications A-1

Appendix B Paper Selection B-1

B.1. General Guidelines B-1
Paper Availability B-1
Paper Specifications B-2

B.2. Selecting the Right Paper B-3

B.3. Special Paper B-6
Overhead Projection (OHP) Film B-6
Adhesive-Backed Labels B-7

Appendix C Host Computer Interface C-1

C.1. Parallel Interface C-1
Parallel interface communication modes C-1
Interface Signals C-2

C.2. RS-232C/RS-422A Interface (Option) C-4
RS-232C interface C-4
RS-422A interface C-5

C.3. RS-232C/RS-422A Protocol C-7
PRESCRIBE 2e FRPO D0 command C-8

C.4. RS-232C Cable Connection C-9
Preparing an RS-232C Cable C-9
Connecting the Printer to the Computer C-9

Index Index-1

Mode Select menu ..... Last page

Chapter 1
Installing the Printer

This chapter explains how to unpack and install the printer. The topics covered are:

Positioning the printer
Unpacking and inspection
Names of parts
Setting up and interfacing

1.1. Positioning the Printer

Clearance

Allow at least the necessary minimum clearance around the printer (see below). A total space of 103 cm by 65 cm by 151 cm (41 by 26 by 59 inches) is needed.

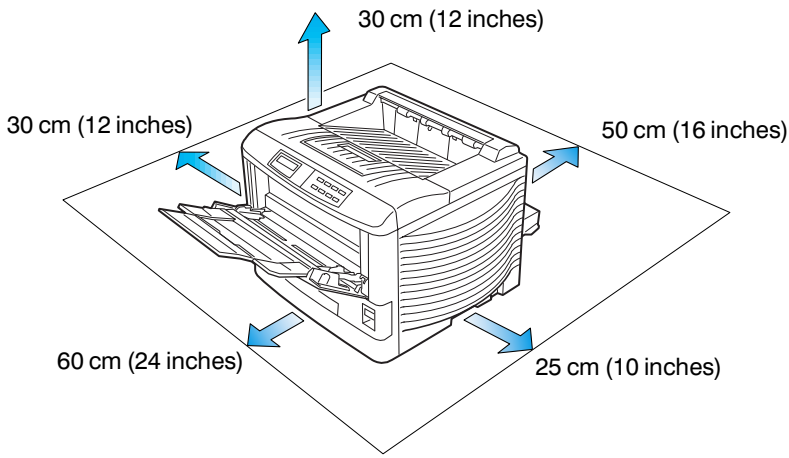

Places to Avoid

Avoid installing the printer in locations subject to:

- ❒ Direct drafts of hot or cold air
- ❒ Direct drafts from outside (Avoid locations near doors leading outside.)
- ❒ Sudden temperature or humidity changes
- ❒ Sources of high temperature, for example, near stoves or radiators
- ❒ Excessive dust
- ❒ Vibration
- ❒ Ammonia or other harmful fumes. (If you are planning to fumigate the room, or make liberal use of insecticide, remove the printer first!)
- ❒ Excessive sunlight or humidity
- ❒ Lack of ventilation
- ❒ Low air pressure, e.g., located more than 2000 meters (6500 feet) above sea level

Basic requirements

The printer will work best if it is installed in a location that is:

- ❒ Near the computer

If the parallel interface is used to connect the printer to the computer, the connecting cable should be shielded type and not be longer than 3 meters (10 feet).

- ❒ Level and well supported

Place the printer on a sturdy table or desk. Do not place the printer on an unstable cart, stand, or table. The printer may fall, causing injury, or serious damage to the printer.

- ❒ Near an AC wall outlet, preferably one that can be used for the printer alone (see section *Power Supply* on next page).

Power requirements are:

Voltage	220 V to 240 V (Asia), ±10 % at each voltage
Frequency	50/60 Hz (220 V to 240 V), ±2 %
Current capacity	Max. 2.5 A at 220 V to 240 V

The outlet should be earthed, or an adapter should be used.

If an extension cord is used, the total length of the power cord plus extension should be 5 meters (17 feet) or less.

- ❒ Well ventilated, not too hot or cold, and not too damp or dry

Temperature	10°C to 32.5°C (50°F to 90.5°F)
Humidity	20% to 80%

If you install the printer where the temperature or humidity is outside the above ranges, you may not get the best print quality, and there will be an increased chance of paper jams.

Power Supply

The printer should not be on the same power circuit as an air conditioner, fluorescent light, copier, or shredder, because these devices generate electrical noise on the power line. If it must share a power circuit with equipment like this, a high-frequency noise filter or isolation transformer is advisable. (Filters and transformers are available commercially.)

Avoid using plug multipliers to connect a large number of devices on the same circuit as the printer.

If the power from the outlet itself appears to be unstable, a line stabilizer should be used. In places where the voltage tends to fluctuate, it may be necessary to install a voltage regulator.

As the disconnect device is not incorporated in the printer's AC primary circuit, an easily accessible socket outlet must be provided near the equipment.

1.2. Unpacking and Inspection

The printer is packed as shown below. Unpack the printer following figures ① and ② below. While unpacking it, check that the listed parts are all accounted for.

Examine the package for any signs of damage that may have been caused during transportation. If the carton is found to be badly damaged, leave the carton unopened and immediately notify the dealer from whom you purchased the printer.

Save the box and other packing materials in case you have to repack the printer for transportation at a later date.

List of shipped components

- ❒ (A) Installation manual (the booklet) and *Kyocera Digital Library* (CD-ROM), including the printer drivers and manuals, and cleaning brush.
- ❒ (B) Power cord
- ❒ (C) Waste toner bottle
- ❒ (D) Toner container
- ❒ (E) Box for the developer unit

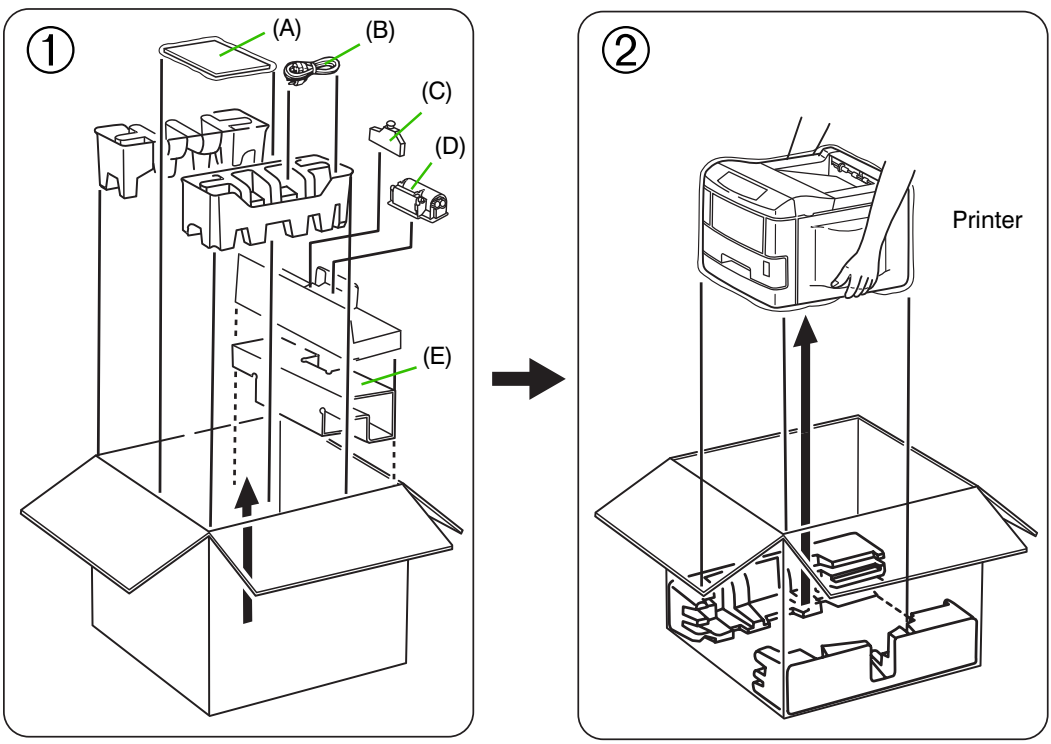

To remove the printer from the box, grasp the handholds on either side of the printer. Lift the printer from the carton as shown below. If necessary, have two people lift the printer.

- **Always use these handholds whenever you lift or move the printer.**
- **The handhold on the right side of the printer doubles as the memory card slot. Be sure to remove the memory card first, if inserted, before lifting or moving the printer.**

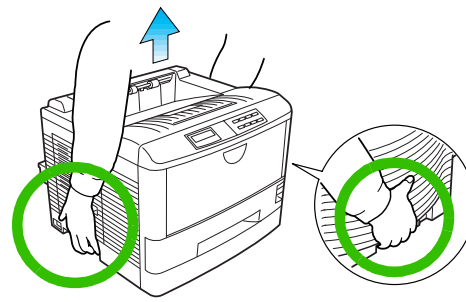

1.3. Names of Parts

This section takes you on a guided tour of the printer, pointing out its major parts. The part names introduced here will be used throughout this manual.

Symbols appearing with the part names have the following meanings.

--- See page XX in the *Installation Manual*.

--- See page XX in this manual.

Front View

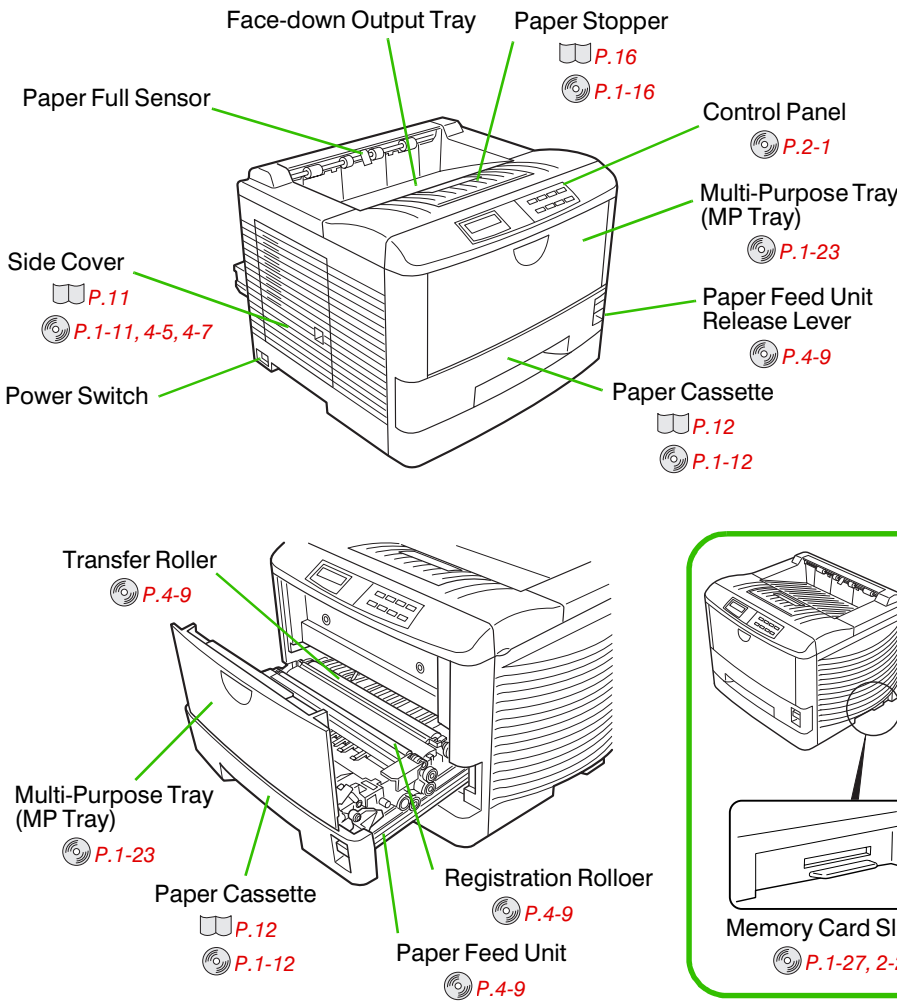

Interior View

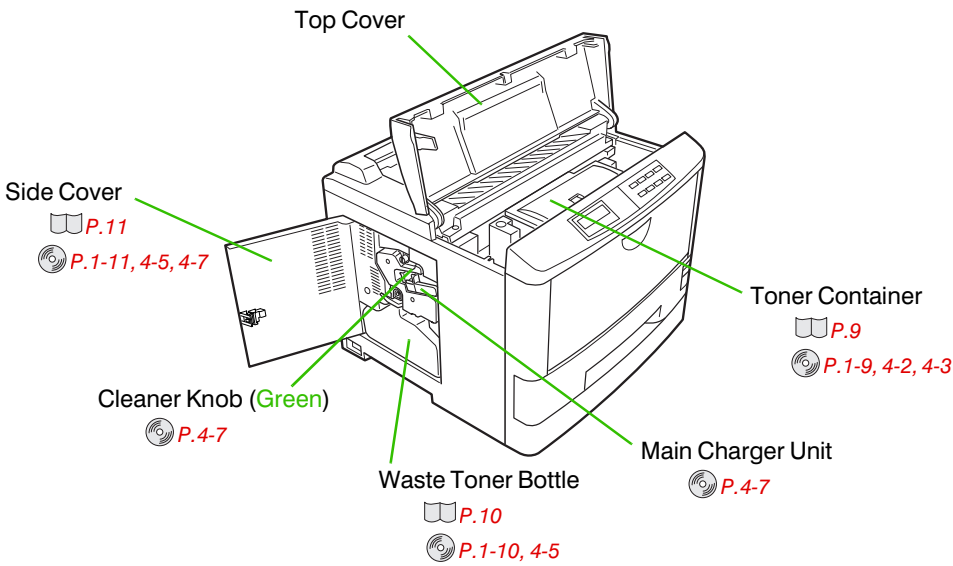

Rear View

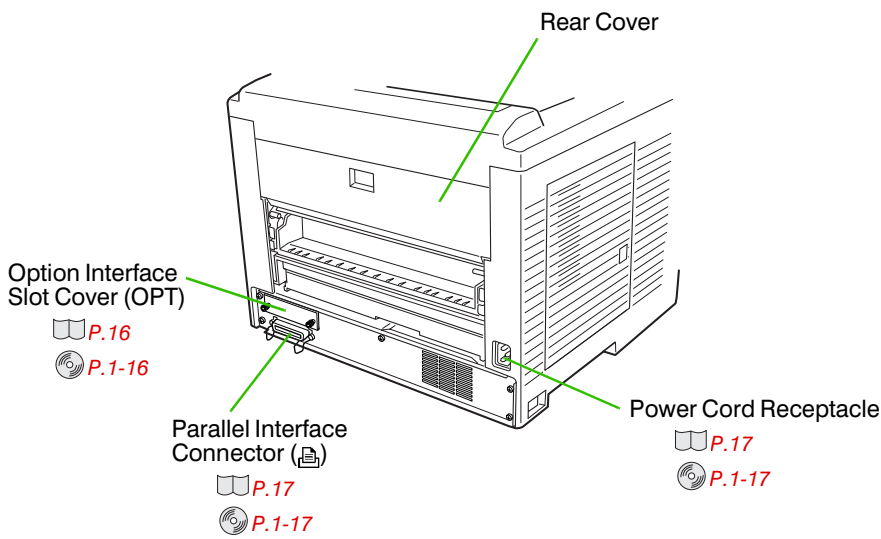

1.4. Setting Up and Interfacing

Before you can use the printer for the first time, you must set up the printer by installing the printer components and interfacing with the computer. The steps to be followed in setting up are:

1—Open the top cover.

2—Install the toner container.

3—Close the top cover.

4—Install the waste toner bottle.

5—Adjust the paper guides of the paper cassette.

6—Add paper.

7—Open the paper stopper on the face-down output tray (if required).

8—Install the face-up output tray (sold separately).

9—Connect the printer to the computer.

10—Attach the power cord.

11—Print a status page.

12—Replacing the control panel.

13—Set the emulation mode.

14—Install the printer driver.

1—Open the Top Cover

1. Remove the packing tape from the printer.
2. Open the printer top cover all the way.

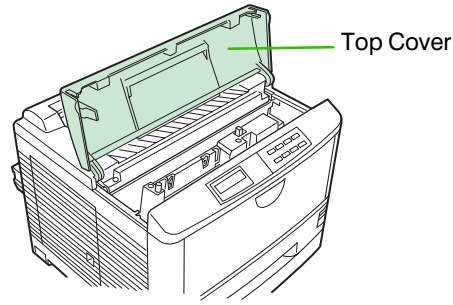

2—Install the Toner Container

1. Take the toner container from the toner kit.
2. With the side where the toner kit name and precautions are printed facing down, thoroughly shake the toner container (in the direction of the arrow) ten times or more to loosen and mix the toner inside.

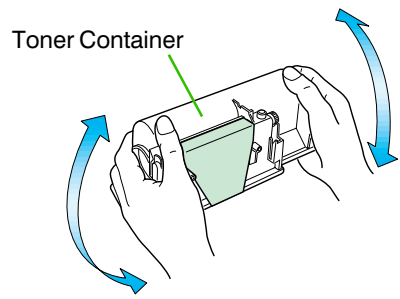

3. The bottom of the toner container is sealed with a sealing strip. Peel off the seal on the toner container and carefully pull off and dispose of the sealing strip.

☛ **Be sure to peel the seal off the toner container before the toner container is fitted into the developer unit.**

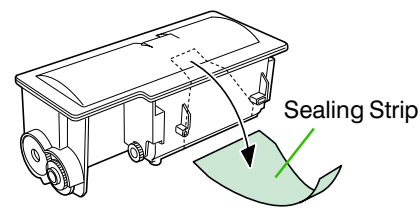

4. Install the toner container on the developer as shown in the figure.

☛ **Insert the toner container straight into the developer unit and press down until it locks securely into place. When inserting the container, you will need to push firmly in order to seat it. Be careful to keep the container straight, and never attempt to pull it upward after you have begun installing it. Doing so could result in damage to the container.**

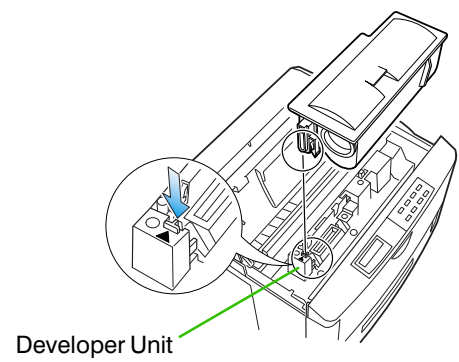

5. When the toner container is installed correctly on the developer, push the top of the container unit ("**PUSH HERE**") until it locks in.

☛ **Make sure that the toner container is properly locked in the printer.**

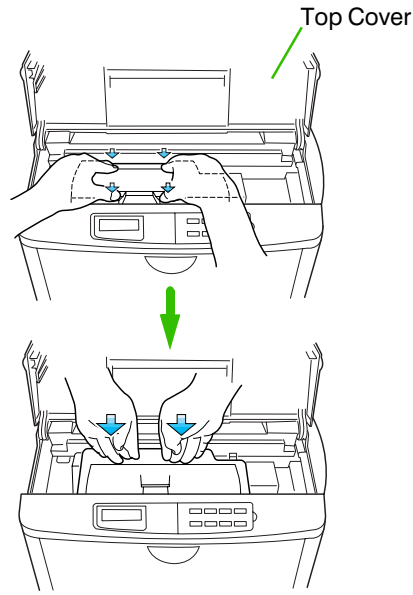

3—Close the Top Cover

Close the top cover.

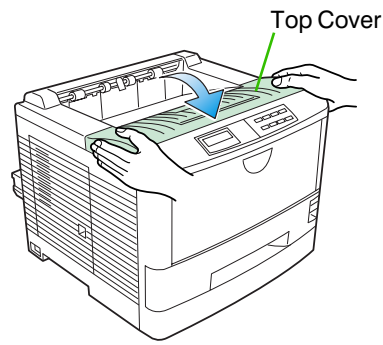

4—Install the Waste Toner Bottle

The waste toner bottle is in the toner kit supplied with the printer. The waste toner bottle must be installed in the printer.

Install the waste toner bottle in the printer as follows.

1. Take the waste toner bottle from the toner kit supplied.

☛ **Do not cap the waste toner bottle.**

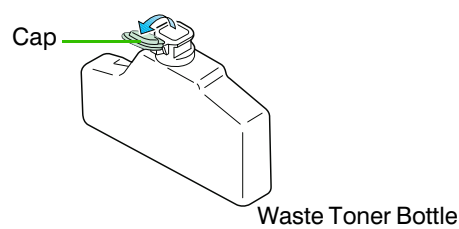

2. Open the side cover on the left side of the printer.

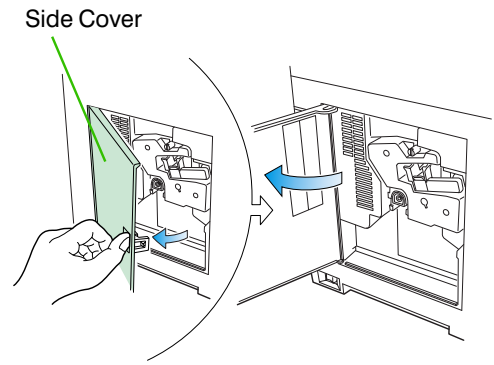

3. Insert the waste toner bottle with the bottle tilted slightly towards you as shown in the figure.

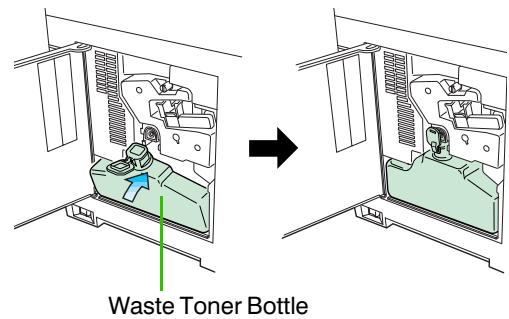

4. Ensuring that it is correctly inserted, close the side cover.

☞ **Although the waste toner bottle will be tilted slightly toward you, it will install properly when the side cover is closed.**

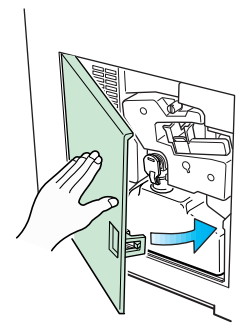

5—Adjusting the Paper Guides of the Paper Cassette

By adjusting the position of the paper guides and paper stopper inside the cassette included with this printer, the cassette may be set to supply paper of standard sizes from A5 size to ledger size. The cassette is set to accommodate A4 or letter size when shipped from the factory.

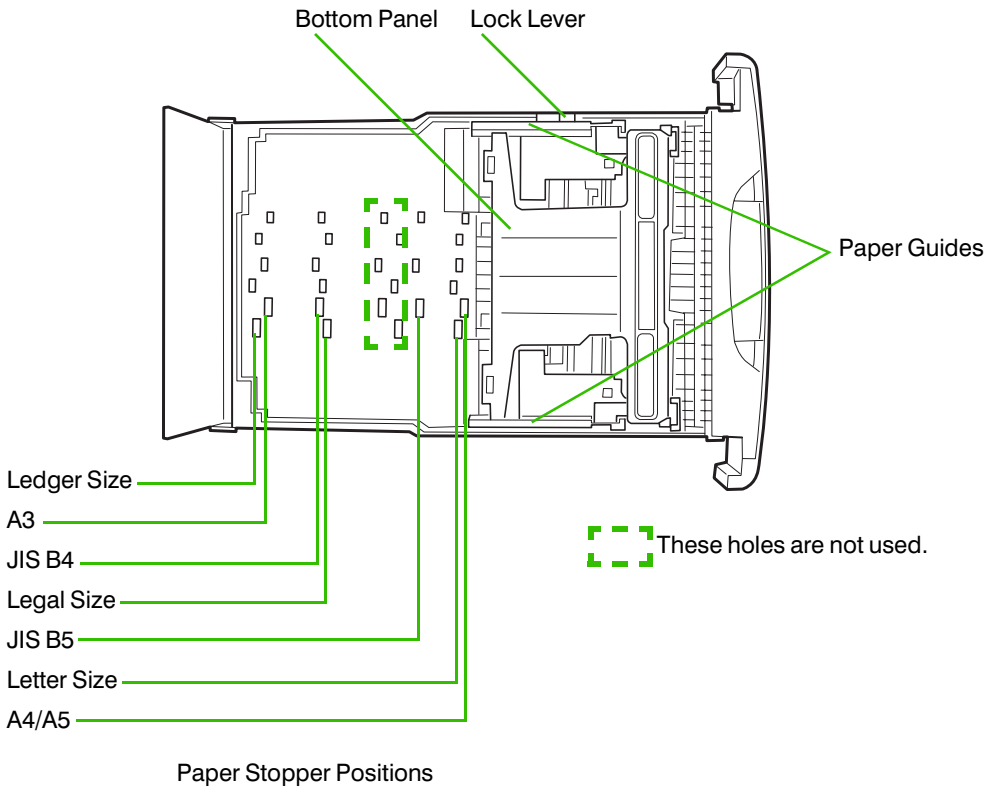

Paper size indications are given inside the paper cassette for each fixed position.

1. Open the cassette cover.

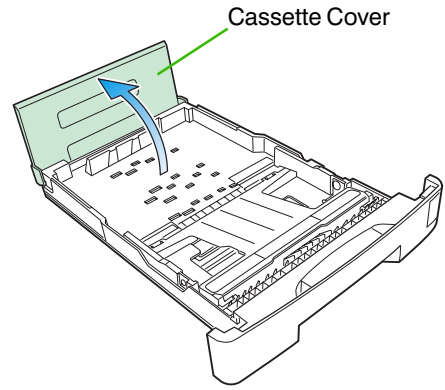

2. Adjust the paper guides. Adjust by pressing the lock levers as shown in the figure and aligning the paper guides to the paper size to be used.

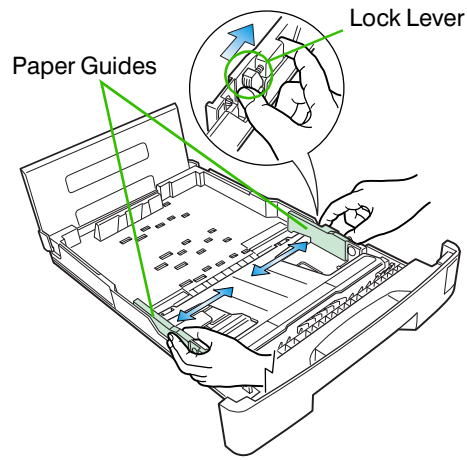

3. Check the position of the paper guides and release the lock levers.

4. Align the paper stopper to the correct position for the paper size to be used and firmly push it into place in the order ①, ②.

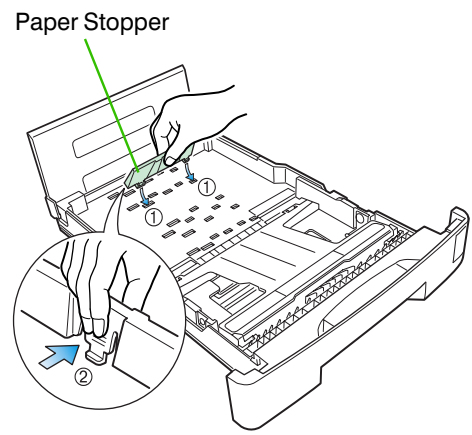

6—Add Paper

Be sure to use paper that has been unwrapped as recently as possible. Paper which has been exposed to the air for a long time will absorb moisture, causing multiple sheets to feed at a time and thus resulting in paper jams. For details on paper specifications which can be used with this printer, refer to *Appendix B* in this manual.

- **Before adding paper, remove the paper cassette all the way from the printer.**
- **Be sure to add paper only after all paper inside the paper cassette has run out. Adding paper before paper in the cassette has run out may result in paper jams.**
- **Read the paper manufacturer's instructions concerning handling of the paper.**

1. Push the bottom plate until it locks.

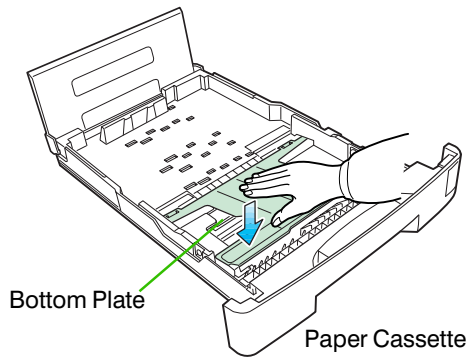

2. Set the paper in the cassette. The paper size must match the cassette size. Tap the edges of the paper to align them neatly.

Don't put in more paper than the limit indicated on the cassette. (The cassette should hold approximately 250 sheets of paper with a 75 g/m^2 [20 lb./ream] basis weight, 0.1 mm thickness.) The side of the paper that faces downward in the cassette is printed on.

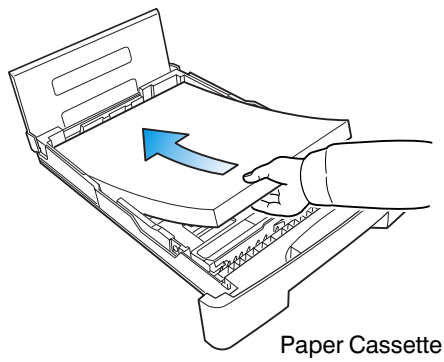

3. Set the clips at the two corners as shown in the figure.

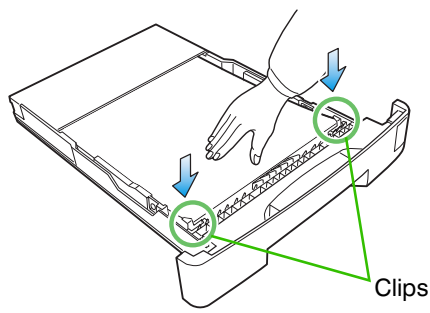

☞ **Some types of paper (such as thick paper) may be hard to place in the cassette using this method. If this is the case, the process is facilitated by inserting the paper from the back, as shown in the figure.**

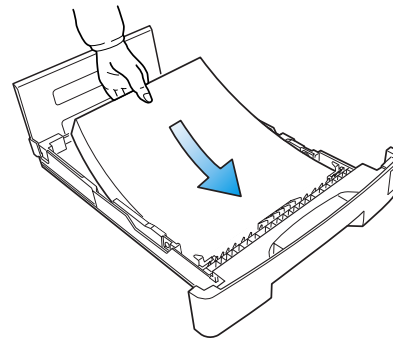

4. Close the paper cassette cover.

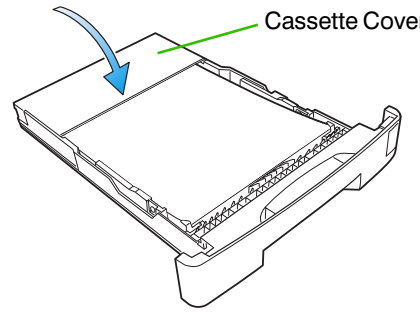

5. Insert the paper cassette into the printer cassette slot. Push it straight as far as it will go.

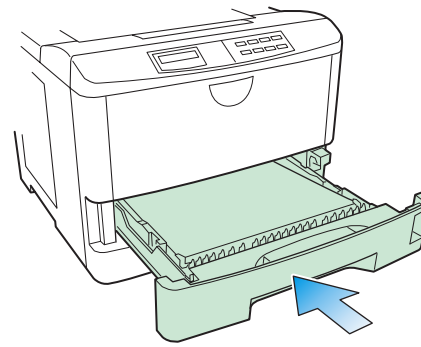

7—Open the Paper Stopper on the Face-down Output Tray (if required)

Open the paper stopper as shown in the figure.

☛ **Depending on the paper, printing without opening the paper stopper may result in more evenly aligned output. Decide whether or not to use the paper stopper after checking the output condition of paper.**

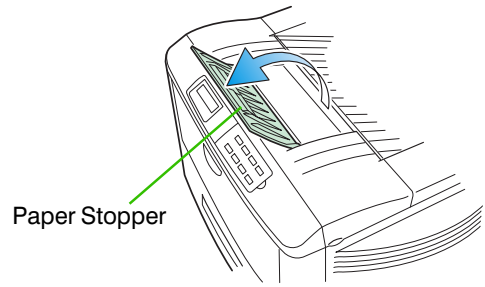

8—Install the Face-up Output Tray (sold separately)

Use the separately sold PT-3 face-up output tray if you want the printed pages stacked face-up (reverse order). Install the face-up output tray as shown in the figure.

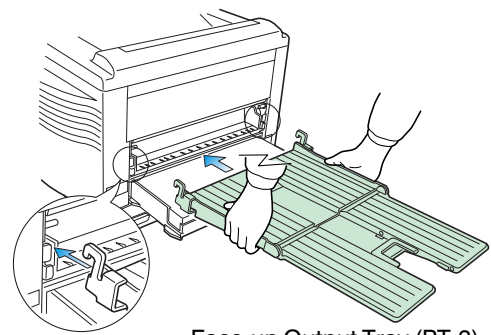

Face-up Output Tray (PT-3)

9—Connect the Printer to the Computer

The printer has one computer cable connector and a slot for installing an optional interface. The one marked " 🖶 " is for a parallel (Centronics standard) interface. You may also use an optional interface, if you have already have one installed. All interface connectors can be used simultaneously with different computers.

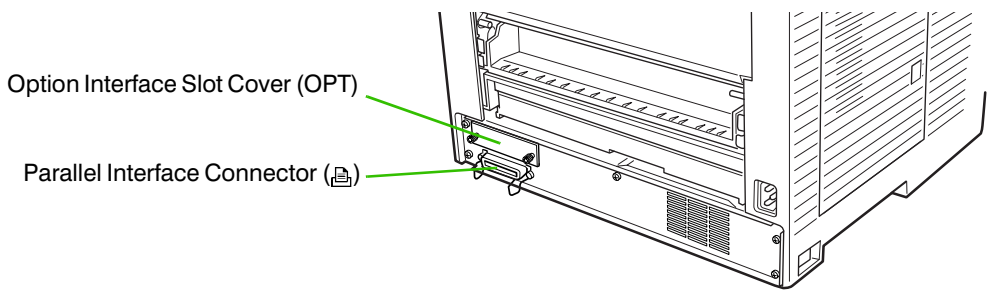

☛ **Only connect or disconnect cables to the connectors while the printer and computer power are switched off.**

Parallel interface

Plug one end of the cable into the connector marked *Parallel* (🖶) on the printer. Close the clips on both sides to hold it in place.

Plug the other end into a parallel (Centronics) interface connector on your computer. This connector is usually marked *PRINTER*.

For more details about the parallel interface, see *Appendix C* in this manual.

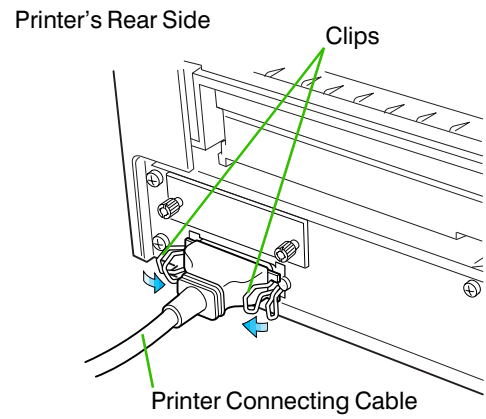

10—Attach the Power Cord

1. Check that the power switch is off.
2. Plug one end of the power cord into the receptacle at the back of the printer.
3. Plug the other end into the wall outlet.

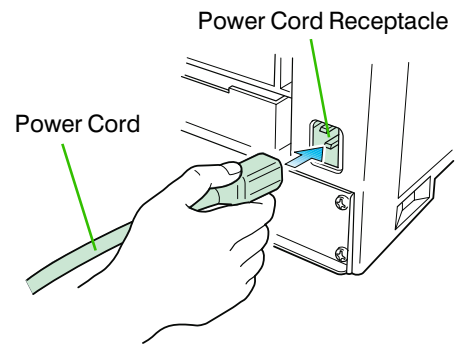

11—Print a Status Page

Test that the printer works by printing out a status page as follows.

1. Switch on the printer's power. The message display should indicate `Self test`.

☛ **When the printer is first switched on after the toner container is installed, there will be a delay of several minutes (approx. 10 minutes) before the printer will be ready to print. During this period, the toner indicator will flash and the message display will show `Please wait`.**

2. Wait until the ON LINE indicator is also lit and the message display indicates `Ready`.
3. Press the **STATUS** key. The printer should print a page listing the positions of margins, memory allocation, and other information.

A sample status printout is shown in *Chapter 2* in this manual.

12—Replacing the control panel

The English panel attached to the printer's control panel can be replaced by other language panels (local panels). When necessary, replace the panel as follows. (In some areas, local panels are not provided.)

1. Remove the panel with a device such as a screwdriver as shown in the figure.

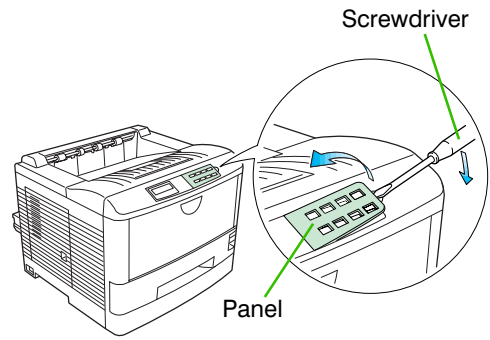

2. Set the local panel in place and attach by pressing lightly with your hand.

☛ **You can change the language used for displaying menus and messages on the printer's control panel. For details on how to change the language, please refer to the printer's user's manual.**

13—Set the Emulation Mode

The printer emulates the operation of five other printers. It is factory-set to emulate the PCL 6 at power-up. If you primarily use software that supports PCL 6, or that supports the Kyocera printer itself, the factory setting is the one you want. If you primarily use software that supports another printer, it is convenient to change the printer's power-up emulation mode.

The emulation mode can be changed from the printer control panel. To change the emulation mode, refer to the *Mode Select Menu* diagram on the last page of this manual.

14—Install the Printer Driver

Printer drivers are provided for using the printer with Windows 95, Windows 98, or Windows 3.1. Use the *Kyocera Digital Library* CD-ROM supplied with the printer. To install the printer driver, proceed as follows. Reference to the Windows manual is also recommended.

Windows 95/Windows 98

The automatic installation screen appears when the CD-ROM for the printer is inserted into the computer, if the computer is set for CD auto-run. Proceed with the installation according to the instructions that appear on the screen. Read the explanation below for information about the main screens during installation. (The screens shown below are typical examples. Specific screen content may vary slightly according to the version of the *Kyocera Digital Library CD-ROM* being used.)

Select *FS-6300* from this screen.

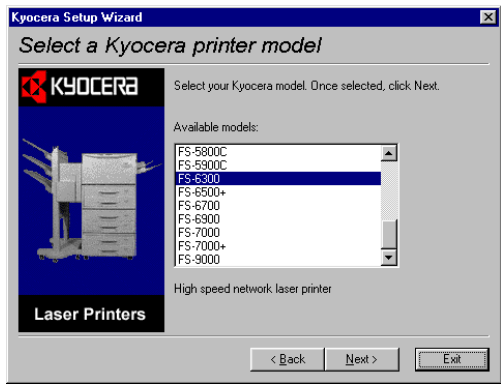

The types of drivers are shown below. Select the driver that you need. (When you click an explanation appears below the box.

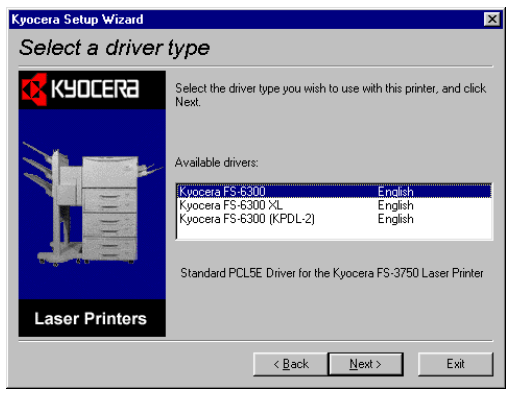

Depending on the computer, installation screens may not appear. If this happens, install the printer driver according to the procedure below.

1. Insert the supplied CD-ROM (*Kyocera Digital Library*) into the CD-ROM drive of the computer.
2. Click on *Start* with the mouse on the Windows95/98 Task Bar, and align the cursor with *Settings*. Click on *Printers* among the items displayed.

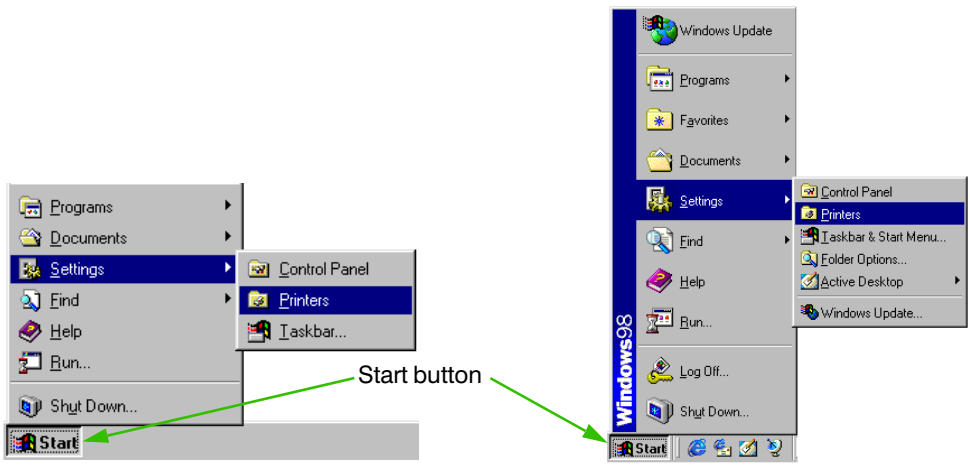

Windows 95 Windows 98

3. The printer folder will open. Double click on Add printer.

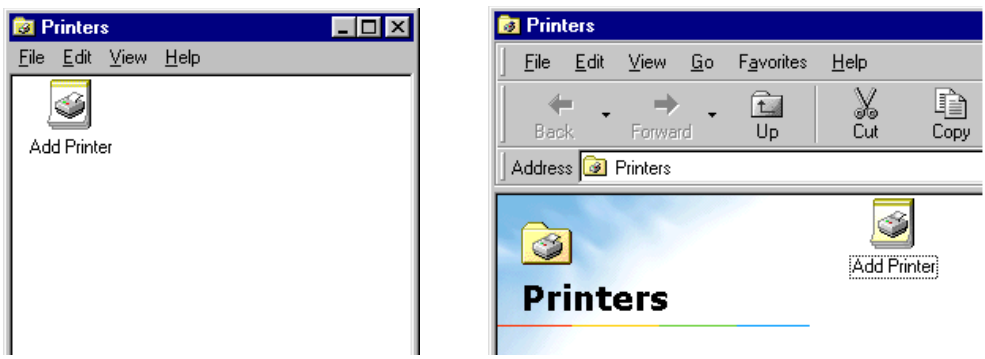

Windows 95 Windows 98

4. The Printer Wizard screen will appear. Click on *Next* >.
5. A screen for selecting the printer to be connected will appear. Select the most appropriate printer and click on *Next*.
6. Next, *Click the manufacturer and model of your printer....* screen will appear. At this point, select *Have Disk* ... located at the lower right. (See the figure for *Step 7*.)

7. A screen for installing from floppy disk will appear. Copy manufacture's files from inside the box, or input one of the following directories:

(Standard PCL5E driver)
[CD-ROM Drive Name]:\drivers\[Language]\pcl\9x

(Standard PCLXL driver)
[CD-ROM Drive Name]:\drivers\[Language]\pcl\9x\enhanced

(Standard KPDL driver)
[CD-ROM Drive Name]:\drivers\[Language]\kpdl\9x

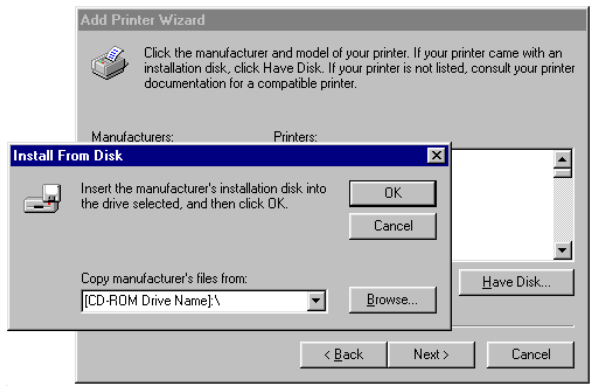

8. Select *Kyocera FS-6300* click on *Next* >, and follow the on-screen instructions to install. Once the driver has been properly installed, a Kyocera printer icon will be added to the printers folder.

☛ **When printing under Windows 95/98, be sure to set the emulation of this printer to PCL 6 (default setting). When a KPDL driver is installed, set the emulation to KPDL or KPDL (AUTO).**

9. The following screen appears upon completion of driver installation. Place a check mark next to "*Yes* (recommended)" and click the *Finish* button. The printer prints a print test page to check that the printer driver is installed correctly.

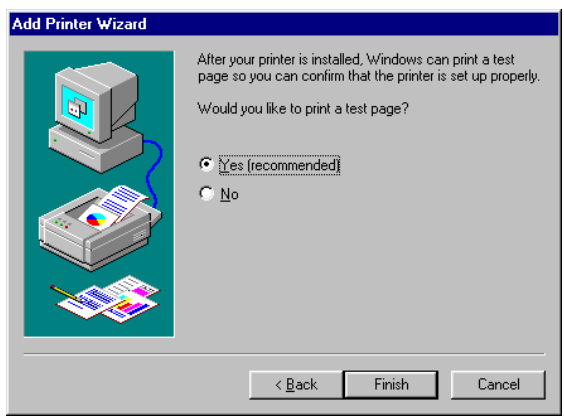

Windows 3.1

To install the printer driver for Windows 3.1, proceed as follows:

1. Insert the *Kyocera Digital Library* CD-ROM in your CD-ROM drive.
2. Start Windows on your computer.
3. Double click on *Control Panel*.
4. Double click on *Printers*.
5. Click on *Add*.
6. Click on *Install*.
7. Select *Install Unlisted* or *Updated Printer* under *List of Printers*.
8. Click *Install*.
9. Select the drive into which you inserted the *Kyocera Digital Library* CD-ROM, and then select one of the following directories.

   (Standard PCL5E driver)
   [CD-ROM Drive Name]:\drivers\[Language]\pcl\3x

   (Standard PCLXL driver)
   [CD-ROM Drive Name]:\drivers\[Language]\pcl\3x\enhanced

   (Standard KPDL driver)
   [CD-ROM Drive Name]:\drivers\[Language]\kpdl\3x

   Click *OK* and follow the instructions that appear on the screen.
10. When the driver is installed, click on *Close* to close *Control Panel*.

Test the Interface with the Computer (DOS)

Test that the printer and computer are correctly connected. If you have connected the printer and computer with a parallel interface cable, follow the procedure below.

1. Check that the printer's message display indicates Ready and that the ON LINE indicator is ON.
2. Boot the computer in DOS mode, or set the computer to DOS (prompt) MODE.
3. At the DOS prompt, type the following.

```
ECHO !R! STAT; EXIT; >PRN
```

If the printer prints a status page, the computer and printer are connected correctly. For details on the status page, refer to *Chapter 2* in this manual.

If you do not get this result, check that the cable is securely plugged in at both ends, and repeat the test. If you still do not get the right result, you may have a defective or improperly-wired cable. Try using a different cable.

1.5. MP (Multi-Purpose) Tray Feeding

The MP tray is incorporated in the front of the printer. It can be used in one of two modes: the first mode or cassette mode.

First mode (automatic manual feeding):

If there is paper in the MP tray, paper is fed from the MP tray first even if another paper source is selected. (Default factory setting)

Cassette mode:

In this mode, it is possible to continuously feed approximately 100 sheets (0.1 mm thickness).

- **In first mode, all printing is performed according at the paper feed timing given by the custom paper size regardless of the MP tray size setting.**
- **Use the PT-3 face-up output tray (optional) for output of postcards, envelopes, OHP film, and other thick media.**

Feeding from the MP Tray and Associated Settings

1. Taking hold of the front of the printer as shown in the figure, open the MP tray by pulling towards you.

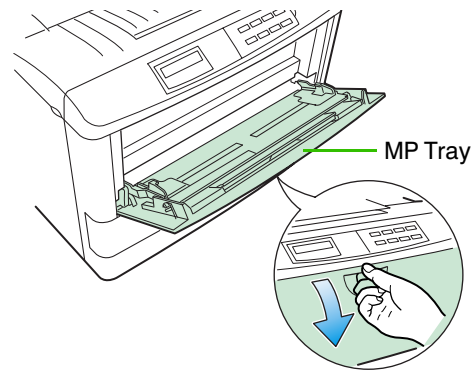

2. Withdraw the sub tray as shown in the figure.

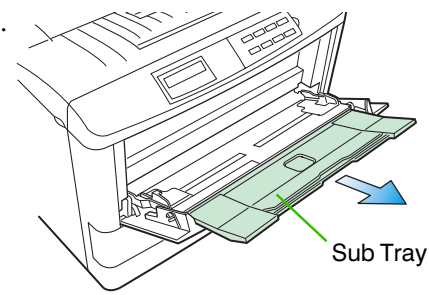

3. Adjust the paper guides to the size of the paper being fed.

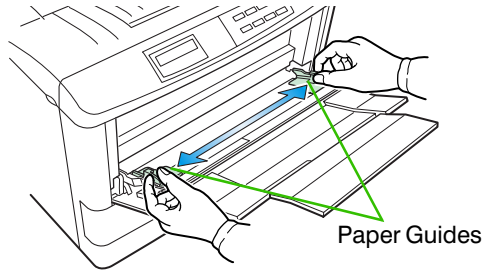

4. Check that the printer is Ready.

5. Press the **FEED** key until the message display indicates MP tray and the MP tray indicator on the printer symbol flashes, and Add paper appears on the message display.

6. Load the paper.

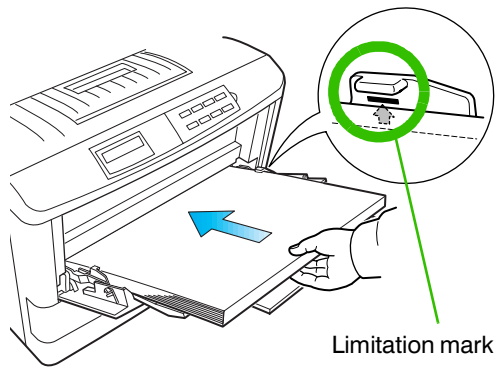

7. Press the **MODE** key and then the **+** (output select) key or **–** (paper feed select) key several times to display Paper handling>.

8. Press the ► key and then the **+** key or **-** key several time to display >MP tray mode.

9. Set the mode. For the procedure for setting each mode, see the settings for each mode given below.

10. Press the ► key to display >MP tray size, then by pressing the **ENTER** key, the size of the paper that will be fed from the MP tray will be set for a list of paper sizes which can be set, see *page B-4*. For a depiction of the menu display hierarchy, see the menu hierarchy given at the end of this manual.

☛ **Paper jams or improper printing may occur if the paper size setting and MP tray size setting do not match. In addition, it is necessary to select either vertical feed (A4, Letter) or horizontal feed (A4-R, Letter-R) from the control panel when using A4 size or letter size paper.**

The following pages explain the use of the MP tray in the First Mode and Casette Mode.

Setting Each Mode

First Mode (Automatic Manual Feeding)

The printer automatically feeds the paper placed on the MP tray regardless of the current paper source selection. To use the first mode (automatic manual feeding mode), simply place a sheet of paper on the MP tray in the same manner as above, even while the printer is presently feeding the paper in the printer's cassette.

1. Press the **MODE** key. Then use **+** or **-** keys to display `Paper handling>`.
2. Press the ► (**Form Feed**) key to display `>MP tray mode`.
3. After pressing the **ENTER** key, `?` is displayed in the lower left, then the mode display is changed by pressing the **+** and **–** keys. Use these keys to display `First` , and then press the **ENTER** key.

```
>MP tray mode
 First
```

4. Press the **EXIT** key. `Ready` appears on the message display.

- **The printer will not switch to light the MP tray indicator while the paper is fed manually using the automatic manual feeding mode.**
- **In first mode, be sure to set the MP tray to the same paper size and paper type as set for the current cassette. If the paper size or type differs, a paper jam may result. Also note that it is not possible to select the MP tray as the current cassette and perform duplex printing. An optional duplexer (DU-25) is required to perform duplex printing.**

Cassette Mode

1. Press the **MODE** key to display `Paper handling>`.
2. Press the ► (**Form Feed**) key to display `>MP tray mode`.
3. After pressing the **ENTER** key, `?` is displayed in the lower left, then the mode display is changed by pressing the **+** and **–** keys. Use these keys to display `Cassette` and then press the **ENTER** key.

```
>MP tray mode
 Cassette
```

4. Press the ► key to display `>MP tray size`. Pressing the **ENTER** key will cause a `?` to be displayed in the lower left. Change the paper size by pressing the **+** or **–** key and then press the **ENTER** key.

```
>MP tray size
   A4
```

5. Press the **EXIT** key. Ready appears on the message display.

☛ **In cassette mode, duplex printing can be performed. We recommended that duplex printing be performed from the paper cassette. An optional duplexer (DU-25) is required to perform duplex printing.**

Feeding Envelopes

Envelopes should be fed face up, right side first, as shown below. From the Mode Select Menu, set the printer to print in landscape page orientation.

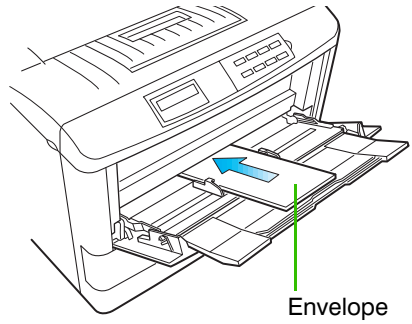

☛ **To avoid trouble, we recommend that envelopes are delivered face-up. Use the STACK key on the printer control panel to select the face-up tray.**

Not all envelopes print well. See *Appendix B* for details on suitable types of envelopes.

See *page 2-3* for the envelope sizes that can be set.

Overhead Projection (OHP) Film

To avoid trouble, OHP film must be fed manually in the manner described above.

Requirements regarding OHP film are also given in *Appendix B*.

☛ **OHP film must be delivered face-up. Use the STACK key on the printer control panel to select the face-up tray.**

1.6. Memory Card

A memory card is a microchip card containing, for example, nonresident fonts and/or macros, forms, etc. The printer reads the contents of the card into its internal memory when power is switched on. The presence of this data in the printer memory can be confirmed on the status printout.

☛ **The maximum card capacity that can be used is 32 Megabytes. The type of the memory card to be used must be of either flash memory card (+5 V type) or SRAM-type and conform to the PCMCIA 2.1 (JEIDA 4.2) standards. Please use a memory card recommended by Kyocera.**

The memory card slot is located at the bottom right of the printer.

To insert and use a memory card:

1. Switch printer power off.

☛ **Do not insert or remove a memory card while power is on. If the memory card is removed while the printer is on, damage could result in the printer's electronics or the memory card.**

2. Insert the memory card in the slot. Insert it face up, connector end first. Push it in all the way.

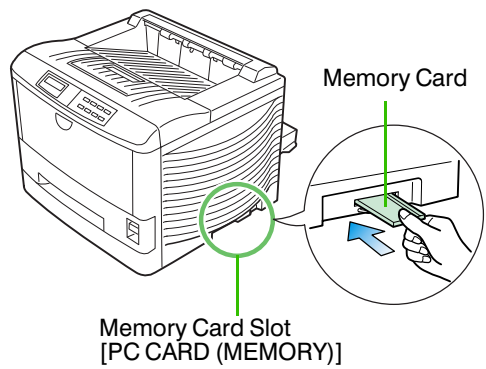

3. Switch printer power on. The printer reads the contents of the memory card during its power-up sequence. The information (nonresident fonts, etc.) on the memory card is now available for use.

If the memory card information is deleted from the printer's memory during the printing process, it can be reread by using the mode selection function explained on the *last page* in this manual.

To remove the memory card:

1. Switch the power off.
2. Remove the memory card from the slot.

Handling a Memory Card

A memory card contains sensitive electronic circuits. Treat them with appropriate care.

- A memory card is sensitive to electrostatic discharge. Please discharge yourself before touching a memory card.
- Never attempt to force a memory card into its slot.
- Never bend a memory card.
- Avoid impact. Do not drop a memory card.
- Do not touch the terminals of the memory card.
- Do not spill water or other liquids on a memory card.
- Keep a memory card away from naked flames and other sources of heat.
- Do not leave a memory card lying in direct sunlight.

For details regarding the use of the memory card, refer to *Section 2.8.* in this manual.

1.7. Memory Expansion Installation

In this section is explained how to expand the printer's memory. Expanded printer memory enables you to print more complex pages, download more fonts, and define more macros.

It begins by explaining how to remove the main circuit board from the printer, and explains how to install a DIMM (dual in-line memory module) on the main circuit board.

The FS-6300 comes supplied with 4 MB of memory installed. A slot is provided for expanding the memory in your printer so that more complex printing can be done, as well as increasing the printing speed. By installing an optional memory card into your printer, the memory in the FS-6300 can be increased to a maximum of 68 MB.

☛ **The expansion memory should be installed only by a Kyocera authorized dealer or Kyocera certified technician. Kyocera shall not be liable for damage due to improper installation of the expansion memory.**

The minimum memory requirements for the printer with various options installed are listed in the table below. Please refer to this table when expanding the printer's memory.

Printing condition	Resolution	
	300 dpi	600 dpi
PCL 6, duplex mode = None	4 MB	4 MB
PCL 6, duplex mode = On	4 MB	5 MB
KPDL, duplex mode = None	4 MB	4 MB
KPDL, duplex mode = On	4 MB	5 MB
PCL 6/KPDL resource protection, duplex mode = None	–	10 MB
PCL 6/KPDL, resource protection, duplex mode = On	–	14 MB

Removing the Main Circuit Board

The main circuit board of the printer is equipped with a socket for memory expansion. Expansion memory is available in the form of a DIMM.

☛ **The following instructions are intended for the technician only.**

Notes on Handling the Main Circuit Board and DIMM

Protect the electronics by taking these precautions:

- ❒ Before touching the main circuit board, touch a water pipe or other large metal object to discharge yourself of static electricity. While doing the work, it is recommended that you wear an antistatic wrist strap.
- ❒ Touch the main circuit board and DIMM only by the edges.

Withdrawing the Main Circuit Board from the Printer

☛ **Be sure to remove the memory card first if inserted in the printer's memory card slot.**

Withdraw the main circuit board completely from the printer as follows:

1. Turn the printer's power off. Unplug the printer's power cable and disconnect the printer from the host computer.
2. Remove the five screws from the printer's rear cover.

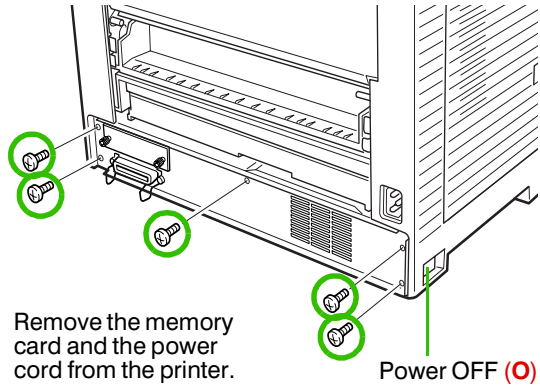

3. Pull the main circuit board all the way out of the pritner.

☛ **Before pulling the main board out, clean an area on the table, etc., at the back of the printer's rear panel. Foreign objects, accidentally sticking to the back of the main board, can cause serious damage to the printer.**

Install the DIMM as described on the next page.

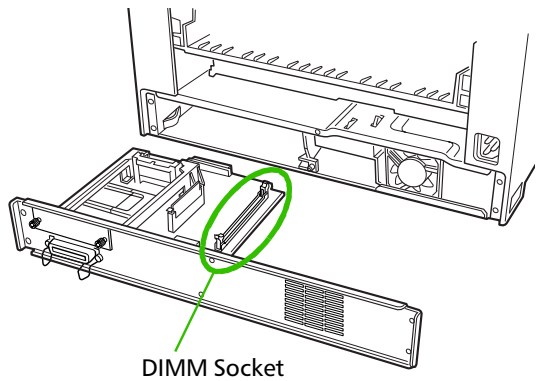

DIMM to be used

See your Kyocera dealer for purchasing information of the DIMM that are best suited for use with this printer.

Either a 8 MB, 16 MB, 32 MB or 64 MB DIMM can be used for memory expansion.

Installing and Removing The DIMM

Installing DIMM

Insert the DIMM into the socket as shown right.

1. Remove the DIMM from its package.
2. Open the clips on both ends of the DIMM slot.
3. Insert the DIMM into the memory slot, so that the notches on the DIMM align with the correspoinding protusions in the slot.
4. Close the clips DIMM slot to secure the DIMM.
5. When you have finished installing the DIMM, reinsert the main board into the printer by reversing the removal procedure.

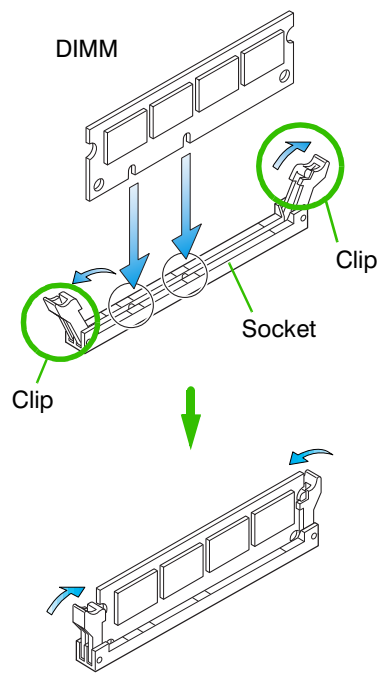

Removing DIMM

To remove a DIMM, carefully pull the end clips outwards, then pull the DIMM out of the socket.

Reverse the procedure under *Withdrawing the Main Circuit Board from the Printer* to put the main circuit board back into the printer.

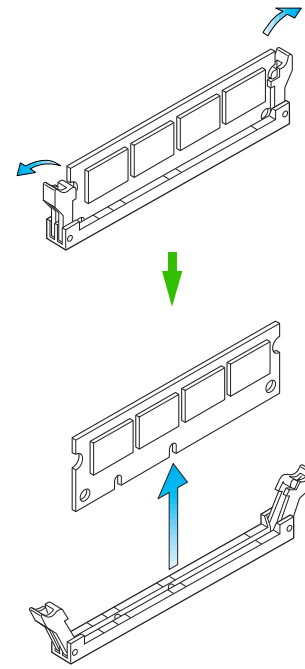

Testing the Expansion Memory

After you have finished installing DIMM in the printer, test the printer to see if the installation has been successful.

To test the expansion memory, proceed as follows:

1. Make sure the power switch is off. Plug the power cord into the printer and turn power on.
2. When the printer is on-line, press the **STATUS** key.
3. If the installation has been successful, the amount of memory shown on the status page will correspond with the amount of expanded memory. (The factory installed memory size is 4 MB.)

Chapter 2
Operating the Laser Printer

This chapter explains the printer's control panel and operating procedures. It covers the fundamental information you will need to use the page printer.

2.1. Control Panel

The printer control panel comprises a message display, keys, and indicators, as shown below.

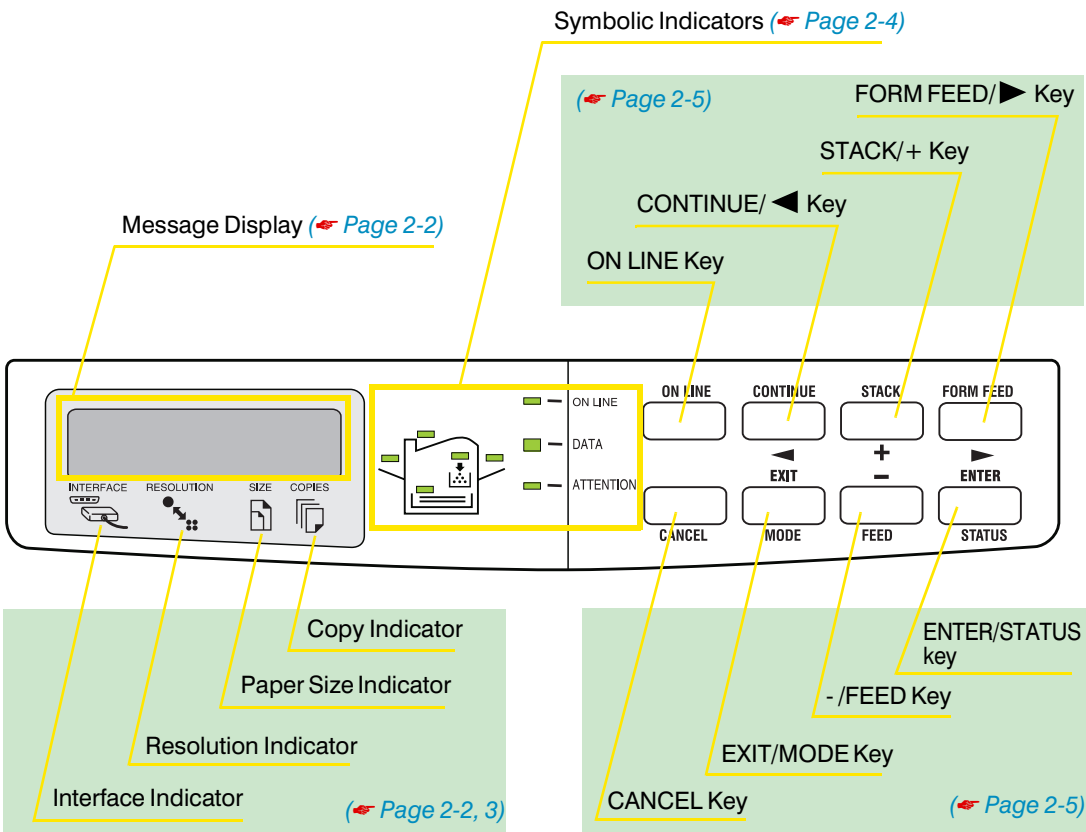

Message Display

The message display gives information in the form of short messages. The seven messages listed below are displayed during normal warm-up and printing.

Message	Meaning
Self test	The printer is self-testing after power-up.
Please wait	The printer is warming up and is not ready.
Ready	The printer is ready to print.
Processing	The printer is receiving data, generating graphics, reading an memory card, or printing.
Waiting	The printer is waiting for a command that says the job is over before printing the last page. Pressing the **FORM FEED** key allows you to obtain the last page immediately.
Sleeping	The printer is in Sleep mode. The printer wakes from Sleep mode whenever a key on the control panel is pressed, the cover is opened or closed, or data is received. The printer then warms up and goes online. (The time that it takes the printer to enter Sleep mode depends on the Sleep Timer setting.)
FormFeed TimeOut	The printer prints the last page after a waiting period.

Other messages appear when the printer needs the operator's attention as explained in *Chapter 5*.

Interface Indicator

The interface indicator shows which of the printer's interfaces is currently active. It uses the following abbreviations:

PAR	Standard bi-directional parallel interface
SER	Optional serial interface (RS-232C/RS-422A)
OPT	Optional network interface

The PAR, SER, or OPT indicator flashes when the printer is receiving and has received all the data, and then remains on. The printer gives priority to data coming in over the interface corresponding to the blinking indicator.

Resolution Indicator

This shows the current printing resolution. The default is 600 dpi (dots-per-inch) in the PCL 6 and KPDL emulation mode and 300 dpi in other emulation modes. The printer's resolution can be selected using the printer's control panel. (See the last page in this manual.)

Paper Size Indicator

The paper size indicator indicates the paper size of the cassette currently installed in the printer or the paper size currently set for the MP tray.

The following abbreviations are used to indicate the paper sizes.

A3	ISO A3 (29.7cm × 42 cm)	BU	Business (4-1/8 × 9-1/2 inches)*
A4	ISO A4 (21 cm × 29.7 cm)	DL	ISO DL (11 × 22 cm)*
A5	ISO A5 (14.8 cm × 21 cm)	C4	ISO C4 (22.9 × 32.4 cm)*
A6	ISO A6 (10.5 cm × 14.8 cm)*	C5	ISO C5 (16.2 × 22.9 cm)*
B4	JIS B4 (25.7 cm × 36.4 cm)	b5	ISO B5 (17.6 × 25 cm)*
B5	JIS B5 (18.2 cm × 25.7 cm)	EX	Executive (7-1/4 × 10-1/2 inches)*
B6	JIS B6 (12.8 cm × 18.2 cm)*	#6	Commercial 6-3/4 (3-5/8 × 6-1/2 inches)*
LT	Letter (8-1/2 × 11 inches)	#9	Commercial 9 (3-7/8 × 8-7/8 inches)*
LD	Ledger (11 × 17 inches)	CU	CUSTOM (11.7 × 17.7 inches)*
LG	Legal (8-1/2 × 14 inches)	HA	Hagaki (10 × 14.8)*
MO	Monarch (3-7/8 × 7-1/2 inches)*	OH	Oufuku-Hagaki (20 × 14.8)*

* with only the MP tray feeding

☛ **While the printer is Processing data to print, the SIZE indicator indicates the paper size selected by the application software.**

Copy Indicator

Indicates the number of copies set in the current interface (1 - 999), and the number is reduced as printing proceeds.

Symbolic Indicators

The symbolic indicators light during normal operation and when the printer needs attention.

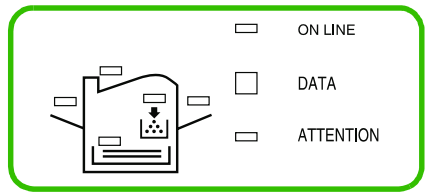

Indicator	Name	Description
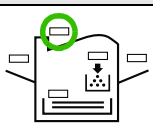	Face-down stack indicator	**Flashing:** Indicates the possibility that paper may be jammed at this point, open and remove any jammed paper. See *Section 5.6*. **Lit:** Indicates when printed pages are delivered to the face-down output tray.
	Face-up stack indicator	**Flashing:** Indicates the possibility that paper may be jammed at this point, open and remove any jammed paper. See *Section 5.6*. **Lit:** Indicates when printed pages are delivered to the face-up output tray, or to the option stacker if installed.
	Toner indicator	**Flashing:** • Indicates there is insufficient toner. See *Section 4.1*. • Indicates that toner is being replenished. Please wait. **Lit:** Indicates that the printer is out of toner. Replace with a new toner container. See *Section 4.1*.
	Cassette feed indicator	**Flashing rapidly:** Indicates the possibility that paper may be jammed at this point, open and remove any jammed paper. See *Section 5.6*. **Flashing slowly:** Indicates that the printer is out of paper. Load more paper. **Lit:** Indicates when paper is fed from the paper feed cassette.
	Multi-purpose feed indicator	**Flashing rapidly:** Indicates the possibility that paper may be jammed at this point, open and remove any jammed paper. See *Section 5.6*. **Flashing slowly:** Indicates that the printer is out of paper. Load more paper. **Lit:** Indicates when paper is fed from the multi-purpose feed tray.
ON LINE	On-line indicator	Flashes when a memory error has occurred. (See *Table 5.3*.) Lights when the printer is on-line. The printer prints received data. Goes off when the printer is off-line. The printer stores but does not print received data.
DATA	Data indicator	**Flashing:** Indicates data transfer is taking place. **Lit:** Indicates either that data is being processed, or that data is being written to the memory card.
ATTENTION	Attention indicator	**Flashing:** Indicates when the printer needs maintenance attention or the printer is warming up (`Please wait`). Read the message on the message display and consult *Chapter 5*. **Lit:** Indicates when a problem or an error occurs which may be cleared by the user. (For example, the paper feed cassette is empty.) Read the message in the message display and consult *Chapter 5*.

Control Keys

The control panel keys are used to configure the printer.

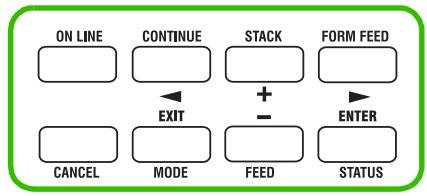

☛ **Settings made with these keys effect only the interface currently in use.**

Key	Function
ON LINE	Switches the printer on-line and off-line.
CONTINUE ◄	1. Depending on the message being indicated, there are cases where operation will continue after pressing the **CONTINUE** key. If such a message is displayed, operation will be resumed after pressing this key. (See *Table 5.3*) 2. Used as the ◄ key in the mode selection function.
STACK +	1. Selects whether printed pages are delivered to the face-down or face-up tray. The optional face-up output tray is required to output pages face-up. (See *page 1-16*.) 2. Lets you access the desired item or enter numeric values. During mode selection, this key is used for switching menus and changing mode settings. It has an auto repeat function that works when the key is pressed and held.
FORM FEED ►	1. Prints and feeds out one page. 2. Used as the ► key in the mode selection function.
CANCEL	1. Abandons a printing job, resets numeric values, or cancels a setting procedure. 2. Turns off the buzzer when the buzzer sounds.
EXIT **MODE**	1. When pressed during mode selection, terminates the setting and returns to the Ready condition. 2. Used to select the emulation, font, character code set; to read an memory card; to select the automatic cassette mode; and others (See the *last page* in this manual.).
— **FEED**	1. Selects the cassette feed or MP tray feed. 2. Lets you access the desired item or enter numeric values. During mode selection, this key is used for switching menus and changing mode settings. It has an auto repeat function that works when the key is pressed and held.
ENTER **STATUS**	1. Finalizes numeric values and other selections. 2. Prints a page of status information on all interfaces together (The printer must be online.).

☛ **Most of the panel functions can also be controlled by PRESCRIBE 2e commands or commands generated by application software. The printer obeys the most recently received printer settings sent from the application software, or from the printer driver, which take priority over control panel settings.**

2.2. Operating Procedures

This section explains basic operations of the printer and procedures leading up to and including printing.

Operating Precautions

- Do not turn off power during printing. This may result in a paper jam or damage to the printer.
- Do not open covers on the printer or covers of optional equipment or move the printer during printing.
- Do not open the paper feed cassette or the paper feed unit during printing.
- Refrain from frequently plugging and unplugging the power plug from the power outlet even when power is turned off.
- Do not plug or unplug the power cord or printer cables while the printer's power is turned on.
- Be sure that the printer's power is off when inserting or removing a memory card. Inserting or removing a memory card while the printer's power is on may result in damage to the memory card and/or the printer.
- Be sure to carefully attach and detach paper feed cassettes and carefully open and close the top cover.
- Be sure to unplug the power cord from the power outlet and take precautions against dust gathering on the printer by draping a cover over it when it is not in use.

Switching Power On

Check that the power cord is securely plugged in at both ends. Check that the printer is connected to the computer (See *page 1-17*).

1. Push the power switch to the ON (|) position.

2. Wait for the printer to warm up. During warm-up the message display will first indicate `Self test` followed by `Please wait`.

3. At the end of the warm-up period, the ON LINE indicator lights, and the message display indicates `Ready`.

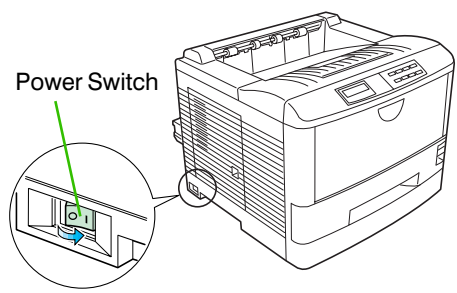

The printer is now ready to print.

☞ **If an error is detected while the printer is warming up, the ATTENTION indicator will light. A message concerning the error will be displayed in the message display. (See *Chapter 5*.)**

Basic Printing Operations

The flow of basic operations to print is given below. Keys on the control panel are explained after that. For details on using the **MODE** key, be sure to read the section "*Mode Select Menu*" at the end of this manual in conjunction with this section.

1. Use the **MODE** key to set an emulation for the printer which conforms to the software being used.
   This printer is shipped from the factory with emulation set to PCL 6.
2. Use the **MODE** key to select the font to use and paper direction.
3. Use the **FEED** key to select paper feeding from the cassette or the MP tray.
4. Use the **STACK** key to select the destination output tray.
5. Use the **MODE** key to set the number of printed copies.
6. Check that the message `Ready` appears in the message display and that the ON LINE indicator lights, then make preparations to print from the computer.

Press the **FORM FEED** key if, after printing, the message `Waiting` appears in the message display.

Selecting the Output Tray

Printed paper can be output on either the face-up output tray or the face-down output tray. Selecting the face-up output tray will cause paper to be stacked with the printed surface facing up. Selecting the face-down output tray will cause paper to be stacked with the printed surface facing down. Normally it is more convenient to use the face-down output tray.

The optional PT-3 face-up tray must be installed in the printer to output pages face-up tray.

When the message `Ready` or `Add paper` appears in the message display, the output tray will be switched every time the **STACK** key is pressed and the selected destination will appear in the message display as follows.

```
Face-up tray
Face-down tray
```

The output tray currently selected will also flash on the indicator on the front panel.

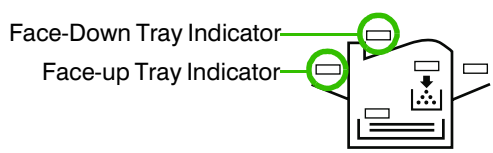

Feed Selection

Use the **FEED** key to select whether to feed paper from the paper feed cassette or the MP tray. If optional paper feeder (PF-26) is installed, any of these can also be selected.

The **FEED** key can be used whenever the message display indicates `Ready` or `Add paper`.

Press the **FEED** key. The selection cycles and is momentarily displayed in the message display as:

`Cassette 1`	(Paper feeder's cassette)
`Cassette 2`	(Displayed when an optional feeder is installed)
`Cassette 3`	(Displayed when a second optional feeder is installed)
`MP tray`	(Printer's MP tray)

The cassette indicator corresponding to the selected cassette on the control panel will flash. Selecting the optional paper feeder (PF-26) cassette will also light the ready indicator on the front of that cassette.

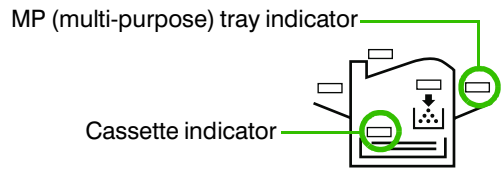

Paper feed selections can also be made using the PRESCRIBE 2e PSRC command.

Switching Online/Offline

After printing starts, it is possible to interrupt printing to check whether the print job is coming out as anticipated.

Pressing the **ON LINE** key during data processing will cause the ON LINE indicator to go out and pressing it during printing will cause the printer to stop after the page currently being printed is finished. During processing means anytime the messages `Processing`, `Waiting` or `FormFeed TimeOut` are being displayed in the message display.

The printer continues to receive data even while the printer is offline while the message `Processing` is displayed.

Press the **ON LINE** key to bring the printer online again. The printer will come online and the ON LINE indicator will light.

Read the section below on how to cancel printing.

Canceling Printing

Perform the following procedure when you wish to cancel printing after it has begun.

1. Check if the message `Processing` is displayed in the message display.
2. Press the **ON LINE** key to take the printer offline.
3. Perform the necessary procedure on the computer to halt printing.
4. Press the **CANCEL** key.
5. The message `Print Cancel?` will appear in the message display and the interface to be canceled will be displayed.
   The following interfaces may be displayed.

`Parallel`	
`Serial`	(appears only when an optional serial interface (IB-10) is installed)
`Option`	(appears only when an optional network interface is installed)
`Current job`	(appears only when canceling printing for the status page or font list)

6. Selecting the interface to cancel using the + or – key and then press the **ENTER** key. Printing from the interface selected will be stopped.

   A few pages may be printed even after the **CANCEL** key is pressed as remaining data received before the **CANCEL** key was pressed is printed.

   The message `Print Cancel? Current job` will also be displayed when the **CANCEL** key is pressed for the purpose of stopping the printing of status pages or font lists from the control panel. When the **ENTER** key is pressed, the message `Cancel-ling data` appears in the message display and printing stops after the printer finishes printing the current page. Cancellation affects only the print job currently in progress; later jobs are not affected.

   Press the **CANCEL** key again if you wish to stop the cancellation of printing.

   Press the **ON LINE** key to put the printer back online to continue with other print jobs.

- **Canceling data from the computer using the CANCEL key will restore temporary settings to their default values. (The same status resulting from executing the PRESCRIBE 2e RES command.)**
- **It is impossible to cancel printing of just one side when printing in duplex mode using an optional duplex printing unit (DU-25).**

Status Printout

It is possible to print out and check the printer's current status including unit emulation, font, and memory usage.

1. Check that the ON LINE indicator lit and that the message `Ready` is displayed in the message display.
2. Press the **STATUS** key. The message display will read `Processing`, and a status page will be printed. After it is finished printing, the message display will return to `Ready`.

An example of a printed status page is shown on the *next page*. Note that information on an actual status page may differ slightly from this example.

You can output a status page showing the printer settings in more detail as follows.

1. Press the **MODE** key to enter Mode Selection mode.
2. Press the **+** or **-** key repeatedly until the message display indicates `Others>`.
3. Press the ► key and then press the **+** or **-** key repeatedly until the message display indicates `>Service>`.
4. Press the ► key and the message display indicates as follows:

```
>>Print
  Status page
```

5. Press the **ENTER** key.
6. When `?` appears on the message display, press the **ENTER** key again.

The printer begins printing out the status page.

Sample Status Page

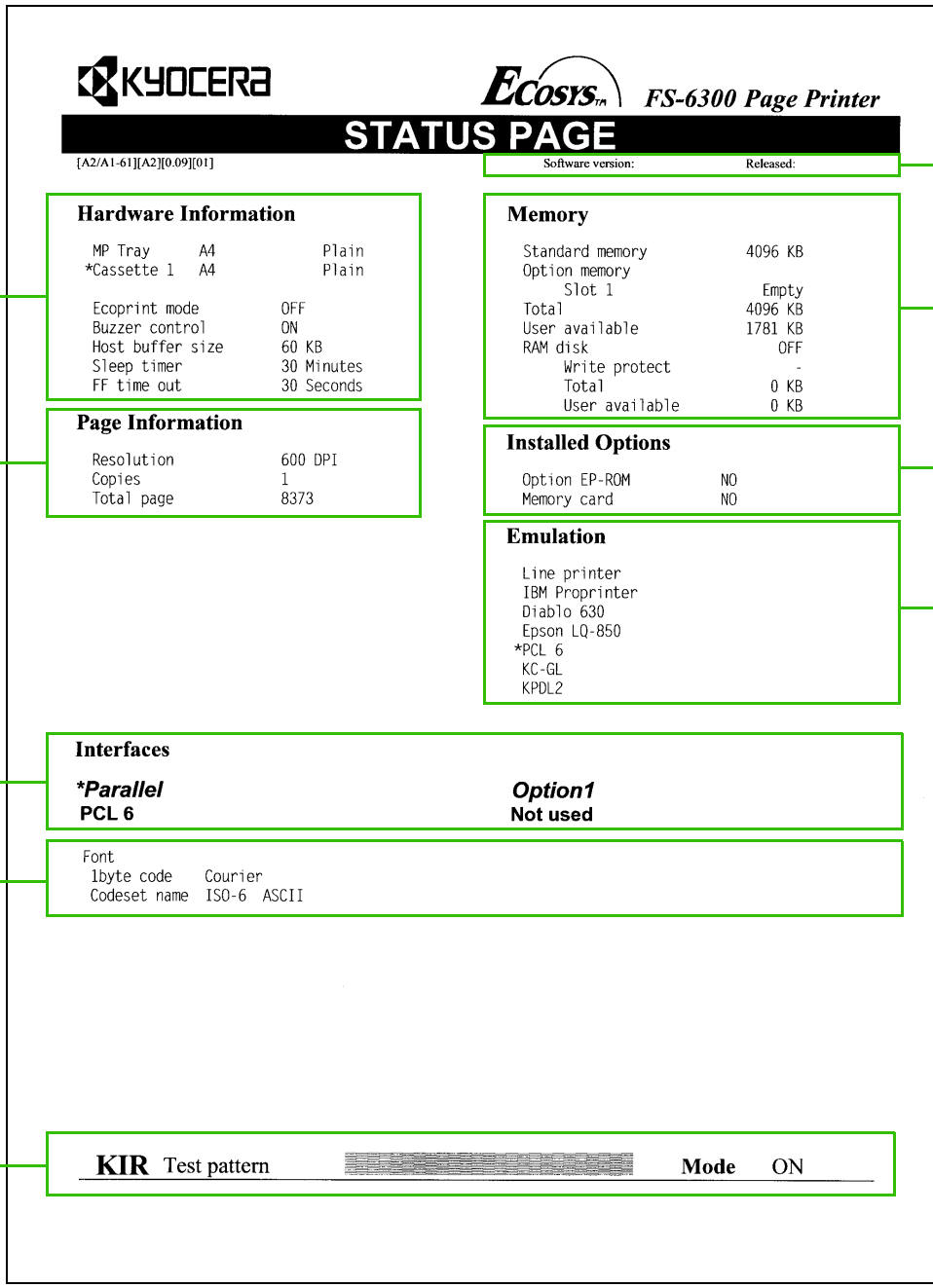

1 — Software version

This information shows the software version and date of issue of the printer.

2 — Hardware information

This information shows the currently selected paper feed source (indicated by an asterisk), paper size, and main settings of the printer.

3 — Page information

This information shows the currently selected resolution and number of copies.

4 — Memory usage

This information shows the amount of total memory installed in the printer and the amount of currently available memory.

5 — Installation Options

This shows the options currently installed in the printer.

6 — Emulation

This shows all available emulations and the currently selected emulation (marked with an asterisk). The printer is shipped from the factory set to PCL 6 emulation.

7 — Interface information

This information shows all interfaces installed in the printer and the currently selected interface.

8 — Fonts at startup (for each interface)

This shows the font automatically selected when the printer starts up (default font). It is possible to set different fonts for the parallel interface and the serial interface. The figure on *page 2-11* shows default settings. The font is set to "1" (Courier bitmap font).

This also shows font information similar to the column below if an optional interface is installed.

9 — KIR test pattern

This is used when setting the printer's KIR mode. For details, see *page 2-35*.

Form Feed

The message Waiting may be displayed in the message display when you get to the end of a print job. This occurs when the software does not issue a final form feed to the printer indicating the end of the print data. In this case, pressing the **FORM FEED** key allows you to finish printing immediately.

1. Check if the message display reads Waiting.
2. Press the **FORM FEED** key. The message display will now read Processing and the last page will print.

☛ **The Waiting display may also appear due to interruptions in printed data while the computer is processing data. Pressing the FORM FEED key unnecessarily when the message display reads Waiting will result in a form feed.**

2.3. Mode Selection Menu

This section explains the menu hierarchy used for all menus which can be set and selected using the **MODE** key. The **MODE** key can be used to display all of the menus in the table below. This mode selection menu conforms to the menu hierarchy given at the end of this manual.

Pressing the **MODE** key initially displays menus at the top of the hierarchy.

Use the + and – keys to move between menus in the same level. The + key shows the next menu, while the – key shows the previous one. Change levels by using the ◄ and ► keys. The ► key moves to lower levels (sub-menus), while the ◄ key moves to higher levels.

Mode Selection Menu List

Item	Function	Default Setting
Print Menu Map	Prints a menu map with the current settings on it.	—
Interface >	Selects the interface on which the control panel settings are effective. This setting affects only the currently active interface. Parallel setting has a sub item in which one of four data transmission modes can be selected — Nibble (high), Auto, Normal, or High speed Serial setting has five sub items, and sets the following RS-232C/RS-422A parameters: Baud rate Data bits Stop bits Parity Protocol Barcode mode* If an optional network board is installed, also makes the network settings.	Parallel Auto 9600 8 1 None DTR(pos.)&XON Off
Emulation >	Changes the emulation mode on the current interface. The ► key allows access to sub item >Code set. Also with KPDL emulation, print settings can be made when there is an error or alternative emulation.	PCL 6

Item	Function	Default Setting
Font >	Select the current interface font. The default number for selecting an internal font is I000 (this is the number for Courier). If there are optional fonts in the printer other than the internal ones, you can specify them by switching to the Option display. Depending on the type of optional font, the symbols used at the start of the font number change as follows: Soft font (Download): S Fonts resident in a Memory Card: M Fonts resident in a RAM disk: H Fonts resident in an optional ROM: O This menu also allows printing the font lists, selecting Courier, Letter Gothic, and selecting the size and pitch of the font.	Internal I000 (Courier)
Page set >	Press the ► key to set the following page printing method. Number of copies Size reduction settings [See *page 2-19*.] Page orientation Page protect LF action CR action Wide A4	 001 [CS]→[CS] Portrait Auto LF only CR only Off
Print quality >	Press the ► key to set the following print quality. KIR mode Ecoprint mode Resolution	 On Off 600 dpi
Opt. ROM >	Reads information from the option ROM installed in the printer's main board.	—
RAM DISK mode >	The following settings can be made from submenus when the total printer memory is 12 MB or more and this mode is set to On.	Off
MEMORY CARD >	Reads or writes data from or to an memory card in the printer's memory card slot. Also, this menu allows deletion of data from an memory card; and formatting the memory card.	—

Item	Function	Default Setting
Paper handling >	The following operations can be performed from sub-menus on paper type.	
	MP tray mode	First
	Paper size for MP tray	A4 or Letter
	Paper type for MP tray	Plain
	Paper type for Cassette	Plain
	Paper type for Cassette 1-3	Plain
	Duplex printing mode*	None
	Override A4/Letter	Off
	Set up the custom paper type	—
	Reset the custom paper type	—
Others >	The following sub-menus can be displayed by pressing the ► key and then the + and – key	
	Message language setting	English
	Automatic form feed timeout setting	30 sec.
	Sleep timer setting [See *page 2-33*.]	30 min.
	Receive data damping [See *page 2-34*.]	—
	Printer reset	—
	Display total number of printed pages	—
	Resource setting	Off
	Alarm (buzzer) setting	On
	Service (for service personnel)	—

/*: These items are available only when the printer is installed with the applicable option unit/kit.

For items with the > mark on the message display, the ► (**FORM FEED**) key lets you go down to the sub items which give access to more items to change the relevant settings.

2.4. Configuring Interfaces

The printer is equipped with a parallel interface. An optional serial interface is also available.

To configure each interface, press the **MODE** key and use the + or – key to select the interface you wish to make settings for.

☞ **This interface selection does not select which interface data will be received from. The printer automatically selects that interface.**

Parallel Interface

The parallel interface mode of this printer supports a bi-directional/high-speed mode. Normally, this interface is used under the default setting Auto, see *Appendix C*. After setting the interface, be sure to reset the printer or turn the power off at least once. The new setting will be enabled thereafter.

2.5. Emulation Selection

The following emulations can be selected for this printer. The emulation selected is stored even while the printer's power is off.

Line printer
IBM Proprinter
Diablo 630
Epson LQ-850
PCL 6 (Default setting)
KPDL
KC-GL

KC-GL Emulation

The following settings can be made from the sub-menu when KC-GL emulation is selected.

Display	Description
>KC-GL Pen width	The width of pens (1) through (8) can be set in 1-dot increments from 01 to 99. After selecting the pen on this sub-menu, you can also display and select the width set for that pen on a lower menu.
>KC-GL Page set	Any of the following page sizes can be set: A2, A1, A0, B3, B2, B1, B0, SPSZ (custom size specified using the SPSZ command). The selected page size will be automatically reduced to the actual paper size being used.

2.6. Reduction (Page Set)

Make settings on the page set menu to print at a reduced size. This menu is used to set the source paper size and the paper size to use after reduction. These settings can be made from within programs or files using the PRESCRIBE 2e SPSZ command.

- **Printed results when making reductions differ from equivalent size printing. Sometimes the line width of characters may not be consistent or lines may appear in figures or image patterns.**
- **Landscape feeding while making reductions is possible from the MP tray in first mode.**

Bring up the page set menu. The following display will appear.

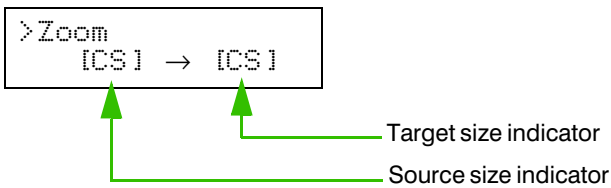

Source size indicator This is the paper size before reduction.
This must be the same as the paper size set for print data from the computer.

Target size indicator This is the paper size after reduction.
This must be the same as the paper size set for the feed cassette.

It is possible to set the following paper sizes (envelope) when using the PRESCRIBE 2e SPSZ command. The message display will show the messages given in the following table.

Source Size-Target Size Combinations

Source Size Indicator	Target Size Indicator	Reduction/Enlargement Ratio
CS	CS CS 98%	100% 98%
LG Legal size (8.5 × 14 inches)	LG LG 98%	100% 98%
LT Letter size (8.5 × 11 inches)	LT A4 LT 98%	100% 94% 98%
LD Ledger size (11 × 17 inches)	LD LD 98%	100% 98%
A5 (14.8 × 21 cm)	A5 A5 98%	100% 98%
B5 (18.2 × 25.7 cm)	B5 B5 98% A5	100% 98% 81%
A4 (21 × 29.7 cm)	A4 LT B5 A4 98% A5	100% 94% 86% 98% 70%
B4 (25.7 × 36.4 cm)	B4 B5 A4 B4 98%	100% 70% 81% 98%
A3 (29.7 × 42 cm)	A3 A4 B4 A3 98%	100% 70% 86% 98%

2.7. RAM DISK

The RAM DISK function can be used when the total printer memory is 12 MB or more. A RAM DISK can be set up as a virtual media device by setting a given amount of the total printer memory as the RAM DISK. This can then be used for reading and writing data just as with a memory card. Note however that data written to the RAM DISK is lost if the printer is reset or its power turned off. RAM DISK settings can be made from the printer's control panel.

☛ **The RAM DISK is set from the printer's user memory. The printer's printing speed may therefore drop or insufficient memory errors result depending on the value of the RAM DISK setting.**

Setting the RAM DISK Size

1. Press the **MODE** key.
2. Press the **+** or **-** key and select `RAM DISK mode >`.
3. The default setting is `Off`. Pressing the **ENTER** key will cause a `?` to flash. Press the **+** or **-** keys to display `On` and then press the **ENTER** key.
4. Press the ► key to display `>RAM DISK size`.
5. Press the **ENTER** key again, and change the RAM DISK size using the **+** or **-** key. It is not possible to make a setting that exceeds total printer memory. The default value for the RAM DISK is the total printer memory minus 9 MB (For total memory of 21 MB, default RAM disk size is 9 MB). This parameter may be set anywhere from `01` to `59` depending on the available printer memory. Press the **EXIT** key if you want to cancel the setting.
6. Once the desired RAM DISK size is displayed, press the **ENTER** key.
7. Press the **EXIT** key. Then turn the printer's power off and on again. The setting will be activated after restart.

RAM DISK Operations

The following operations are available with the RAM DISK.

- ❒ Read Data
- ❒ Write Data
- ❒ Delete Data
- ❒ Print a List of Data Names

Procedures for all operations are the same as for a memory card. Please see the memory card item for the given procedure.

2.8. Memory Card

This printer is equipped with a memory card slot. This allows, for example, the use of fonts other than internal fonts by using an optional font card. If a JEIDA Ver. 4.2 memory card is used, it is possible to read, write and delete data and format the memory card.

☛ **Only 32 MB or less flash or S-RAM type memory card conforming to JEIDA Ver. 4.2 can be written or formatted by this printer.**

It is possible to set the partitions on the memory card which you wish to execute for the printer at power-on by using the PRESCRIBE FRPO I0 command. For details on the FRPO command, see *Appendix C*.

Font cards can be read from the control panel or read automatically upon power-on or printer reset when a font card is inserted in the printer.

Inserting the Memory Card

Carefully insert the memory card as far as it will go with the top side facing up.

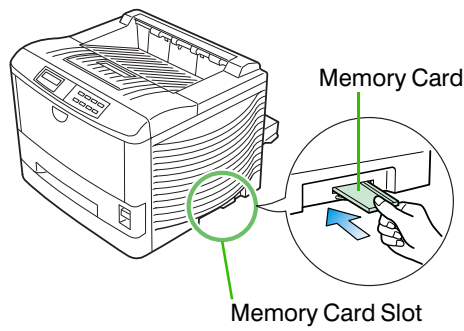

☛ **Follow the precautions below when handling a memory card.**

- **A memory card is sensitive to static electricity. Before handling a memory card, be sure to eliminate any static electricity which may have built up on your body or clothing by touching a metallic object.**
- **Use a flash memory card or a S-RAM memory card conforming to JEIDA Ver. 4.2 which is approved by Kyocera.**
- **Be sure that its power is off when inserting or removing a memory card.**
- **Do not insert a memory card into the slot with undue force.**
- **Do not bend a memory card.**
- **Do not drop a memory card or subject them to shock.**
- **Do not splash water or other liquids on a memory card.**
- **Do not place a memory card near fires or heat sources.**
- **Do not subject a memory card to direct sunlight.**
- **Store a memory card in their protective case when not using them.**

Operating a Memory Card

The following operations on a memory card inserted into the printer's memory card slot is possible.

- Reading Fonts
- Reading Macros
- Reading Data
- Writing Data
- Deleting Data
- Formatting a Memory Card
- Printing a List of Data Names (Partitions)

Note that only reading fonts and printing a list of partitions are possible when a font card is inserted. The following sections explain each of these operations.

Each operation is described below.

Reading Fonts from a Memory Card

Fonts can be read into the printer's internal memory from optional font cards. The font read can then be selected from the printer's control panel. Font cards are automatically read into the printer when the printer's power is turned on. The operation described here is performed while the message display reads Ready.

1. Check that the font card is inserted into the memory card slot. Bring up the menu >Read fonts on the message display. This display only appears if a font card is inserted.
2. Press the **ENTER** key. ? will appear.

   Press the **CANCEL** key to stop reading fonts.
3. Pressing the **ENTER** key again will cause Processing to appear in the lower part of the message display and font data to be read from the font card.
4. After fonts have been read, the message display will return to >Read fonts.
5. Pressing the **EXIT** key will cause the message display to return to Ready.

Reading Macros from a Memory Card

Macro data on a memory card can be registered on the printer. Registered macro data can be used just like macro data located in printer memory. If a memory card already containing macro data is inserted in the printer, that macro data will be read into the printer automatically when the printer's power is turned on.

The operation described here is performed when a memory card is inserted while the message display reads Ready.

☛ **Macro data on a memory card has no effect on printer memory.**

1. Check that the memory card containing macro data is inserted. Bring up the menu >Read macro on the message display. This display only appears if a memory card containing macro data is inserted.
2. Press the **ENTER** key. ? will appear.

   Press the **CANCEL** key to stop reading macro data.
3. Pressing the **ENTER** key again will cause Processing to appear in the lower part of the message display and macro data to be read from the memory card.
4. After macro data has been read, the message display will return to >Read macro.
5. Pressing the **EXIT** key will cause the message display to return to Ready.

☛
- **If the name of a macro on the memory card is the same as that in printer memory, the macro data on the memory card with the conflicting name will not be registered.**
- **Registered macro data will be lost if the memory card is pulled out. Re-execute >Read macro if this happens.**

Reading Data (Partitions) from a Memory Card

Specified data (partitions) on a memory card can be read into printer memory.

1. Bring up the menu >Read data on the message display. This display only appears if there is data on the memory card.
2. Press the **ENTER** key. ? will flash.
3. You can scroll through data names on the memory card one by one by pressing the **+** key. Press the **CANCEL** key to stop reading data.
4. Press the **ENTER** key while the desired data name is being displayed Processing will appear in the message display and the selected data will be read into the printer. After data has been read, the message display will return to Ready.

Writing Data (Partitions) to a Memory Card

Data sent from the computer can be written on a memory card. Data written on the card can be read into printer memory by key operations from the control panel of the printer.

Assuming the card has enough memory capacity, up to 127 partitions can be written on a single card. Partitions written on the card are automatically assigned names, which can be checked by printing out a partition list.

Check that the memory card can be written (that write-protection is released).

1. Bring up the menu >Write data on the message display.
2. Press the **ENTER** key. ? will appear.
3. Pressing the **ENTER** key again will cause Processing to appear in the message display followed by Waiting.

Press the **CANCEL** key to cancel writing data.

4. With the printer now set, send data from the computer to the printer.

[Example] Sending the file TEST.TXT to the printer from the computer (DOS mode).

```
COPY TEST.TXT PRN
```

The message display will change to Processing when data is received and will change back to Waiting when reception is finished.

5. Press the **FORM FEED** key. The printer will automatically print the data just written (example below). This printout can be used to check the name (partition name) under which data was written and confirm that it was written properly.

```
                    MEMORY CARD   WRITE   INFORMATION
--------------------------------------------------------------------------------

     Slot number              : A
     Data Type                : 2/Data
     Partition name           : DataS003      /System define
     Write data length        : 00001704
     Others                   :
```

Slot number: Slot name for the memory card (only A is supported)
Data type: Data type (only 2 is supported)
Partition name: Name of the partition (data) written
Write data length: Size of the partition data written (in units of bytes)

After printing is finished, the message display will return to Ready.

Deleting Data from a Memory Card

It is possible to delete data names on a memory card one at a time. Check that the memory card can be written (that write-protection is released).

1. Bring up the menu `>Delete data` on the message display. This display only appears if the memory card contains data.
2. Press the **ENTER** key. `?` will flash and a data name will appear after it.

   The `?` will flash, and a data name will appear.

   ```
   >Delete data
   ? (data name)
   ```

3. You can scroll through data names on the memory card one by one by pressing the **+** key. Press the **CANCEL** key to cancel this operation.
4. Press **ENTER** key while the data name you wish to delete is shown. The message display will change to `Processing`.

   The message display will return to `Ready`.

Formatting a Memory Card

It is necessary to first format a new memory card before it can be used by the printer. Formatted a memory card can then be written with data.

- **Note that if you format a memory card which already has data written on it, that data will be lost entirely.**
- **Check that the memory card can be written (that write-protection is released).**

1. Bring up the menu >Format on the message display.
2. Press the **ENTER** key. ? will appear.
3. Pressing the **ENTER** key again will cause Processing to appear in the message display and the memory card will be formatted.

   The printer will print memory card formatting information (example below) after initialization is finished. Use this to check that the memory card has been formatted properly.

```
                        MEMORY CARD   FORMAT   INFORMATION
--------------------------------------------------------------------------------

    Formatting is completed.


    Slot number       : A
    Card Size         : 00524288
    Data Size         : 00000062
    Remaining Size    : 00524226
```

Slot number: Slot name for the memory card (only A is supported)
Card size: The overall memory capacity of the card (in units of bytes)
Data size: The amount of data available to the system
Remaining Size: The remaining amount of available memory on the memory card

After this information is printed, the message display will return to Ready.

Printing a List of Data Names (Partitions)

This operation prints the contents (data names, data size, etc.) of the memory card inserted in the memory card slot.

1. Bring up the menu >List of Partitions on the message display.
2. Press the **ENTER** key. ? will appear.

   Press the **CANCEL** key to cancel printing.
3. Pressing the **ENTER** key again will cause printing to start.

```
                              MEMORY CARD   STATUS   PAGE

-------------------------------------------------------------------------------

    --Partition--        --Name--          --Size--       --Type--        --Slot--

          1               DataS001          1980           Data            A
          2               DataS002          32             Data            A
          3               DataS003          1704           Data            A
-------------------------------------------------------------------------------

        -- Card Size --        -- Data Size --       -- Remaining Size --
         A: 00524288           A: 00003992           A: 00520296

         Current terminate string: WRED
```

After this information is printed, the message display will return to Ready.

☞ **"Remaining Size" in the partition list indicates the amount of remaining memory on the memory card. Since the system uses about 70 bytes to write a piece of data on the memory card, the actual available memory on the card is a little less than that displayed.**

2.9. Setting the Paper Type

This printer is capable of printing under the optimum setting for the type of paper being used.

Setting the paper type for the paper source from the printer's control panel will cause the printer to automatically print in the mode best suited to that type of paper. This allows you to easily achieve high-quality printing results. A different paper type setting can be made for each paper source including the MP tray. Not only can preset paper types be selected, but it is also possible for the user to define and select customized paper types.

The following types of paper can be set. For details on paper, please see *Appendix B*.

Cassette, Media Type and Custom Settings

Paper feed source / Paper Type	MP tray	Cassette	Duplex path (MP tray available only in Cassette mode)
Plain	○	○	○
Transparency	○	×	×
Preprinted	○	○	○
Labels	○	×	×
Bond	○	○	○
Recycled	○	○	○
Vellum	○	×	×
Rough	○	○	○
Letterhead	○	○	○
Color	○	○	○
Prepunched	○	○	○
Envelope	○	×	×
Cardstock	○	×	×
Custom #	○	○	○

○: Can be stored ×: Cannot be stored

☛ **Custom is a paper type defined and registered by the user. Up to eight types of user settings may be defined. A number from 1 to 8 is used in place of the #. For details on setting user types, please see *page 2-30*.**

Making Settings

The following describes the procedure for setting the paper type using the Recycled type and Cassette as examples.

1. Display `Paper handling >` on the printer's Mode Select Menu and press the ► key. Then use the + and – keys to display the `Cassette type`.

2. Pressing the **ENTER** key will cause a ? to flash. Press the + and – keys to display `Recycled`.

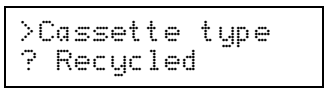

   Press the **CANCEL** key if you want to cancel the setting. The ? display will disappear.

3. Pressing the **ENTER** key will cause the ? to disappear. Pressing the **EXIT** key will exit the setting.

The same procedure can be used to set the paper type for other paper sources.

Paper Type User Setting

The following describes the procedure used to set a user-defined paper type for the printer. Eight custom user settings may be registered. After having been set, any of these may be called up when setting the paper type for a paper source.

1. Display `Paper handling >` on the printer's Mode Select Menu and press the ► key. Then use the + and – keys to display `>Type adjust`.

2. Pressing the **ENTER** key will cause a ? to be displayed. Press the + and – keys to select the paper type (see *page 2-29*) that you want to customize and then press the **ENTER** key.

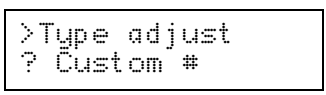

☞ **Note that if you change the setting for a paper type other than `Custom 1` through `8` the paper type setting for each paper source set to that paper type will be changed.**

3. Press the ► key after selecting the paper type you want to customize. Pressing the + and – keys will cycle through a display of the submenus given in the table below.

Submenus displayed	Selection parameters	Description
>>Paper weight	Light (Thin) Normal (default) Heavy (Thick) Extra heavy	Sets the paper thickness Light: vellum, Normal: 60~90 g/m^2, Heavy: 90~135 g/m^2 (MP tray: 90~200 g/m^2), Extra thick: Transparency and Card stock
>>Fuser mode	Vellum Low Middle (default) High	Sets the temperature for the fuser unit
>>Duplex path (only when the paper type is Custom #)	Enable (default) Disable	Selects duplex printing on/off when an optional duplexer is installed (setting active only for the selected paper type)

Display the submenu to be set and press the **ENTER** key. A ? will flash. Press the + and – keys to select the desired parameter.

```
>>Paper weight
? Normal
```

(Example: Setup menu for Paper weight)

Press the **CANCEL** key if you want to cancel the setting. The ? will disappear.

4. Pressing the **ENTER** key will cause the ? to disappear. Pressing the **EXIT** key will exit the setting.

The same procedure can be used to set the parameters on other submenus.

Note that the setting status for paper weight used for each paper type is as given in the table below. In addition, all paper type settings made using Type adjust can be reset to the default values shown in the table below using the >Reset type adjust menu.

		Paper Type													
		Plain	Trans-parency	Pre-printed	Labels	Bond	Recycled	Vellum	Rough	Letter-head	Color	Pre-punched	Enve-lope	Card stock	Custom
Fuser mode	Vellum							○							
	Low														
	Middle	○	○	○	○	○	○		○	○	○	○	○	○	○
	High														
Paper weight	Light (Thin)														
	Normal	○		○		○	○	○	○	○	○	○			○
	Heavy (Thick)		○		○								○	○	
	Extra heavy														

2.10. Adjusting the Print Density

If necessary, the print density can be adjusted from the MODE SELECT MENU. The required print density can be selected from five different steps (01 [light] - 05 [dark]). The factory setting is 03 , and there is normally no need to alter this setting.

When using the KIR function, please use the "03 " setting. For details on adjusting the KIR mode, see *page 2-35*.

Selecting Print Density Mode

1. Pressing the **MODE** key will put the printer in Mode Select mode.
2. Press + key or – key to select Paper handling >.
3. Press the ► key and then the + key or - key several time to display >Type adjust >.
4. Press the ► key and then press the + key or – key to display >>Print density and then press the **ENTER** key. A ? will flash and the current setting can be changed.
5. Press the + or – key and select the desired setting.
6. Press the **ENTER** key.

   If you want to change the setting, press the **CANCEL** key before pressing the **ENTER** key.
7. Press the **EXIT** key. The Print Density mode setting is now changed.

2.11. Sleep Timer Setting

This printer is equipped with a sleep timer function for conserving energy in cases where there has been no operation from the control panel or data has not been received for a predetermined period of time.

The sleep timer can be set anywhere from 0 to 120 minutes in 5-minute increments. Setting the sleep timer to 0 turns it off. The sleep timer is set at the factory to 30 minutes.

Once the set time arrives, the printer will display Sleeping and all indicators will go out. This minimizes the amount of energy used.

Pressing a key on the control panel, opening and closing a cover, or sending data to the printer while it is displaying `Sleeping` will cause the printer to display `Please wait` and it will begin warming up. After it warms up, the printer's ON LINE indicator will light and it will enter ready status.

The printer will enter Sleeping mode when the set time arrives even during mode selection or while a maintenance message is being displayed.

☛ **The printer environment last set is still maintained even though all indicators are out while the printer is in Sleeping mode.**

Selecting Sleep Timer Mode

1. Pressing the **MODE** key will put the printer in Mode Select mode.
2. Press + or – to select `Others >`.
3. Press the ► key.
4. Press the + key several times to display `>Sleep timer` and press the **ENTER** key. A cursor "_" will flash and the current setting can be changed.
5. Press the + or – key and select the desired value.
6. Press the **ENTER** key.

   If you want to change the setting, press the **CANCEL** key before pressing the **ENTER** key.
7. Press the **EXIT** key. The Sleep Timer mode setting is now changed.

2.12. Dumping Received Data

It is possible to print data received by the printer as hexadecimal code for the purposes of debugging programs and files.

Selecting Dump Received Data Mode

1. Pressing the **MODE** key will put the printer in Mode Select mode.
2. Press + or – to select `Others >`.
3. Press the ► key.
4. Press the + key several times to display `>Print HEX-DUMP` and press the **ENTER** key. A `?` will be displayed.
5. Press the **ENTER** key again and `>Processing` will be displayed for awhile followed by `Waiting`.
6. Send the data to be dumped to the printer. The printer will display `Processing` while it receives the data.
7. Once all data has been received, the message `Waiting` will appear. Press the **FORM FEED** key to finish printing.

   Once the dumped data you require has been output, it is possible to cancel the printing of any further dumped data by taking the printer offline by pressing the **ON LINE** key and then pressing the **CANCEL** key.

2.13. KIR Level

This printer incorporates the KIR (Kyocera Image Refinement) smoothing function. KIR provides high quality printing by providing a software-type improvement to the resolution.

Print a status page to find out the current printing mode.

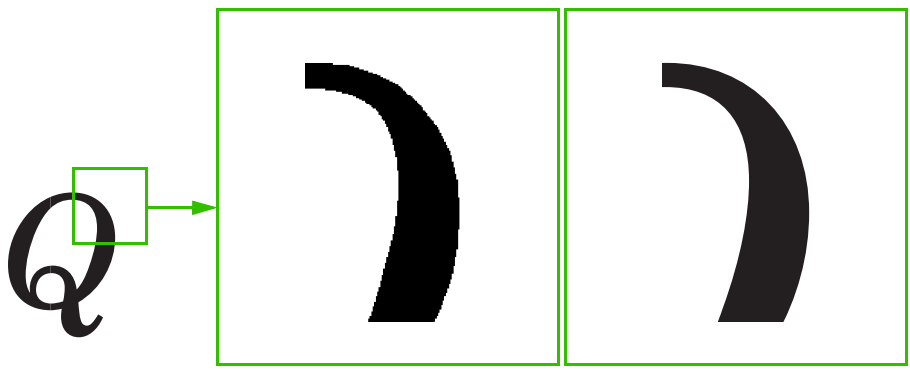

The KIR setting is Off. | The KIR setting is On. (Default setting)

- **Set the print density to 03 when setting the KIR mode. For details on print density, see *page 2-32*.**
- **You can look at the check line, the last line on a KIR test page, to make the optimum KIR mode setting. Refer to the table on the *next page*.**

Status Page

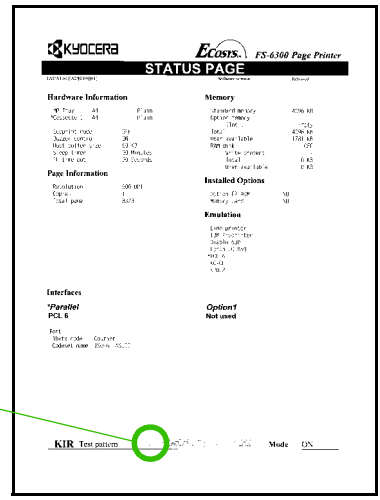

KIR Checking Lines

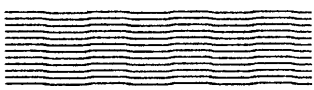

Optimized stripes

The current KIR setting is optimal.

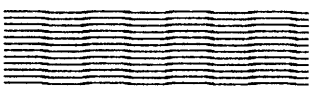

Dark vertical stripes

The KIR mode currently set is too strong. Set the KIR mode to Off. Try printing the test pattern again. If you still get dark vertical stripes, adjust the print density cotrol to a lighter setting. (See the *Mode Select Menu* at the end of this manual)

White vertical stripes

The KIR mode currently set is too weak. Set the KIR mode to On. Try printing the test pattern again. If you still get white vertical stripes, adjust the print density control to a darker setting. (See the *Mode Select Menu* at the end of this manual)

Selecting KIR Mode

1. Pressing the **MODE** key will put the printer in Mode Select mode.
2. Press + or – to select Others >.
3. Press the ► key.
4. Press the + or – key to display >KIR mode and then press the **ENTER** key. A ? will flash and the current setting can be changed.
5. Press the + or – key and select the desired setting.
6. Press the **ENTER** key.

   If you want to change the setting, press the **CANCEL** key before pressing the **ENTER** key.
7. Press the **EXIT** key. The KIR mode setting is now changed.

2.14. Ecoprint Mode

The Ecoprint enables you to reduce the amount of toner consumed on the page so as to save your printing costs.

Ecoprint setting is Off (default).

Ecoprint setting is On

☛ **The Ecoprint setting has no effect on the print speed.**

Selecting Ecoprint Mode

1. Pressing the **MODE** key will put the printer in Mode Select mode.
2. Press + or – to select Others >.
3. Press the ► key.
4. Press the + or – key to display >Ecoprint mode and then press the **ENTER** key. A ? will flash and the current setting can be changed.
5. Press the + or – key and select the desired setting.
6. Press the **ENTER** key.

   If you want to change the setting, press the **CANCEL** key before pressing the **ENTER** key.
7. Press the **EXIT** key. The Ecoprint mode setting is now changed.

2.15. Resource Protection

When you switch from the PCL 6 emulation to another, all downloaded fonts and macros are lost. Resource protection preserves these PCL resources in memory so that they are intact when you change the emulation back to PCL 6.

By using the printer's >Resource prot. , you can select from two resource protection modes as follows:

```
>Resource prot.
  Permanent
```

In this mode, the printer stores fonts, macros, symbol sets, etc. in memory that were downloaded as permanent PCL resources. All temporary resources are lost when the emulation mode is changed from PCL 6 to another or vice versa.

```
>Resource prot.
  Perm / Temp
```

In this mode, the printer stores both permanent and temporary resources when the emulation mode is changed from PCL 6 to another or vice versa.

☞ **Resource protection requires extra memory to store the downloaded fonts and macros. The total size of the printer memory recommended for using the resource protection option is affected by several factors. See *Setion 1.7. Memory Expansion Installation*.**

Selecting Resource Protection Mode

1. Pressing the **MODE** key will put the printer in Mode Select mode.
2. Press + or – to select Others >.
3. Press the ► key.
4. Press the + or – key to display >Resource prot . and then press the **ENTER** key. A ? will flash and the current setting can be changed.
5. Press the + or – key and select the desired setting.
6. Press the **ENTER** key.

   If you want to change the setting, press the **CANCEL** key before pressing the **ENTER** key.
7. Press the **EXIT** key. The Resource Protection mode setting is now changed.

2.16. Setting the Audio Warning (Buzzer)

In addition to the message displayed when the paper supply is exhausted, or when paper jamming occurs, an audio warning is made to sound. This is useful, for example, when the printer is in a location some distance from the user.

The audio alarm is set to On when leaving the factory.

If the alarm is turned Off, the buzzer will sound according to the type of printer error as given in the following table.

Type of Error and Corresponding Audio Alarm (Buzzer)

Priority	Error Message	Alarm Frequency	Remarks
High	Replace Toner Clean printr	short beeps	—
	Replace waste toner bottle	short beeps	—
	Clean printer Press CONTINUE	short beeps	—
	Paper jam	short beeps	—
	Face-down tray paper full	short beeps	—
	Paper path error	short beeps	*
	Load MP tray	short beeps	—
	Memory overflow Press CONTINUE	short beeps	—
	Print overrun Press CONTINUE	short beeps	—
	KPDL Error Press CONTINUE	short beeps	—
	MEMORYCARD err ## Press CONTINUE	short beeps	*
	RAM DISK error ## Press CONTINUE	short beeps	—
	Opt. ROM error Press CONTINUE	short beeps	*
	Load Cassette	short beeps	—
Low	Add paper	long beeps	—

*: These error messages are displayed if the relevant option is fitted.

##: The number displayed will vary depending on the error. Please refer to *Chapter 5*.

The alarm will continue to sound while the error condition continues (if the printer is in the sleep mode, the alarm will be silent for that period alone). The alarm will cease to sound, however, when the **CANCEL** key is pressed.

To rectify the various error conditions listed above, please refer to *Chapter 5* of this manual, or to the operating manuals accompanying the various optional equipment.

- **If you wish to cancel the data being processed while the audio alarm is sounding, press the CANCEL key twice. Firstly, the audio alarm will be turned off, and then the data processing will be canceled.**
- **After the audio alarm has been set to Off, even if the PRESCRIBE 2e FRPO INIT command is executed, the printer will not return to the initial (On) alarm setting. To set the audio alarm to On, reset using the mode select menu from the control panel.**

Selecting Buzzer Mode

1. Pressing the **MODE** key will put the printer in Mode Select mode.
2. Press + or – to select Others >.
3. Press the ► key.
4. Press the + or – key to display >Buzzer and then press the **ENTER** key. A ? will flash and the current setting can be changed.
5. Press the + or – key and select the desired setting.
6. Press the **ENTER** key.

   If you want to change the setting, press the **CANCEL** key before pressing the **ENTER** key.
7. Press the **EXIT** key. The Buzzer mode setting is now changed.

Chapter 3
Fonts

This chapter describes the types of fonts you can use with the printer, including the printer's internal fonts.

3.1. Internal Fonts

A font is a set of characters of a particular design. The design is referred to as a *typeface*. Several characteristics identify a font. These include the code set (For details on the code sets, please read the *Programming Manual* on the supplied CD-ROM.), spacing, pitch, height, style, stroke weight, and typeface family.

The printer has 80 PCL/PS compatible fonts and a bitmap font for a line printer loaded into it. Also fonts may be downloaded to the printer's memory from a memory card or disk. These fonts are referred to as downloadable or soft fonts. The printer accepts as many downloadable fonts as its user available memory permits.

3.2. List of Fonts

This section contains a full list of the printer's internal fonts. You can print the same font list from the printer by using the printer's control panel key. To print a list of fonts, refer to *Mode Select Menu, List of fonts*.

Internal Scalable and Bitmap Fonts

Font number	Font samples
I000	This is a sample of Courier font.
I001	This is a sample of CGTimes font.
I002	**This is a sample of CGTimes-Bd font.**
I003	*This is a sample of CGTimes-It font.*
I004	***This is a sample of CGTimes-BdIt font.***
I005	This is a sample of CGOmega font.
I006	**This is a sample of CGOmega-Bd font.**
I007	*This is a sample of CGOmega-It font.*
I008	***This is a sample of CGOmega-BdIt font.***
I009	*This is a sample of Coronet font.*
I010	**This is a sample of Clarendon-Cd font.**
I011	This is a sample of Univers-Md font.
I012	**This is a sample of Univers-Bd font.**
I013	*This is a sample of Univers-MdIt font.*
I014	***This is a sample of Univers-BdIt font.***
I015	This is a sample of Univers-MdCd font.
I016	**This is a sample of Univers-BdCd font.**
I017	*This is a sample of Univers-MdCdIt font.*
I018	***This is a sample of Univers-BdCdIt font.***
I019	This is a sample of AntiqueOlive font.
I020	**This is a sample of AntiqueOlive-Bd font.**
I021	*This is a sample of AntiqueOlive-It font.*
I022	This is a sample of GaramondAntiqua font.
I023	**This is a sample of Garamond-Hlb font.**
I024	*This is a sample of Garamond-Krsv font.*
I025	***This is a sample of Garamond-HlbKrsv font.***
I026	*This is a sample of Marigold font.*
I027	This is a sample of Albertus-Md font.
I028	**This is a sample of Albertus-ExBd font.**
I029	This is a sample of Arial font.
I030	**This is a sample of Arial-Bd font.**
I031	*This is a sample of Arial-It font.*
I032	***This is a sample of Arial-BdIt font.***
I033	This is a sample of TimesNewRoman font.
I034	**This is a sample of TimesNewRoman-Bd font.**
I035	*This is a sample of TimesNewRoman-It font.*
I036	***This is a sample of TimesNewRoman-BdIt font.***
I037	This is a sample of Helvetica font.

Font number	Font samples
l038	**This is a sample of Helvetica-Bd font.**
l039	*This is a sample of Helvetica-Ob font.*
l040	***This is a sample of Helvetica-BdOb font.***
l041	This is a sample of Helvetica-Nr font.
l042	**This is a sample of Helvetica-NrBd font.**
l043	*This is a sample of Helvetica-NrOb font.*
l044	***This is a sample of Helvetica-NrBdOb font.***
l045	This is a sample of Palatino font.
l046	**This is a sample of Palatino-Bd font.**
l047	*This is a sample of Palatino-It font.*
l048	***This is a sample of Palatino-BdIt font.***
l049	This is a sample of ITCAvantGardeGothic-Bk font.
l050	**This is a sample of ITCAvantGardeGothic-Dm font.**
l051	*This is a sample of ITCAvantGardeGothic-BkOb font.*
l052	***This is a sample of ITCAvantGardeGothic-DmOb font.***
l053	This is a sample of ITCBookman-Lt font.
l054	**This is a sample of ITCBookman-Dm font.**
l055	*This is a sample of ITCBookman-LtIt font.*
l056	***This is a sample of ITCBookman-DmIt font.***
l057	This is a sample of NewCenturySchoolbook-Rom font.
l058	**This is a sample of NewCenturySchoolbook-Bd font.**
l059	*This is a sample of NewCenturySchoolbook-It font.*
l060	***This is a sample of NewCenturySchoolbook-BdIt font.***
l061	This is a sample of Times-Rom font.
l062	**This is a sample of Times-Bd font.**
l063	*This is a sample of Times-It font.*
l064	***This is a sample of Times-BdIt font.***
l065	*This is a sample of ITCZapfChancery-MdIt font.*
l066	Τηισ ισ α σαμπλε οφ Σψμβολ φοντ. (Symbol)
l067	Τηισ ισ α σαμπλε οφ ΣψμβολΠΣ φοντ. (SymbolPS)
l068	❄♒♓♦ ♓♦ ♋ ♦♋❍❑●♏ ❑➚ ♆♓■♑♎♓■♑♦ ➚❑■♦ (Wingdings)
l069	✶❋❄▲ ❄▲ ❁ ▲❁❍❒●❄ ❑❄ ☆✶✣✺❁❒❄❖❄■✳❁❁▼▲ ❄❑ (ITCZapfDingbats)
l070	`This is a sample of Courier-Bd font.`
l071	*`This is a sample of Courier-It font.`*
l072	***`This is a sample of Courier-BdIt font.`***
l073	This is a sample of LetterGothic font.
l074	This is a sample of LetterGothic-Bd font.
l075	*This is a sample of LetterGothic-It font.*
l076	This is a sample of CourierPS font.
l077	**This is a sample of CourierPS-Bd font.**
l078	*This is a sample of CourierPS-Ob font.*
l079	***This is a sample of CourierPS-BdOb font.***
l080	This is a sample of LinePrinterBM8.5-Roman font.

KPDL Fonts (1)

This is a sample of Albertus-ExtraBold font.
This is a sample of Albertus-Medium font.
This is a sample of AntiqueOlive font.
This is a sample of AntiqueOlive-Bold font.
This is a sample of AntiqueOlive-Italic font.
This is a sample of Arial font.
This is a sample of Arial-Bold font.
This is a sample of Arial-BoldItalic font.
This is a sample of Arial-Italic font.
This is a sample of AvantGarde-Book font.
This is a sample of AvantGarde-BookOblique font.
This is a sample of AvantGarde-Demi font.
This is a sample of AvantGarde-DemiOblique font.
This is a sample of Bookman-Demi font.
This is a sample of Bookman-DemiItalic font.
This is a sample of Bookman-Light font.
This is a sample of Bookman-LightItalic font.
This is a sample of CGOmega font.
This is a sample of CGOmega-Bold font.
This is a sample of CGOmega-BoldItalic font.
This is a sample of CGOmega-Italic font.
This is a sample of CGTimes font.
This is a sample of CGTimes-Bold font.
This is a sample of CGTimes-BoldItalic font.
This is a sample of CGTimes-Italic font.
This is a sample of Clarendon-Condensed-Bold font.
This is a sample of Coronet font.
This is a sample of Courier font.
This is a sample of Courier-Bold font.
This is a sample of Courier-BoldOblique font.
This is a sample of Courier-Oblique font.
This is a sample of CourierPCL font.
This is a sample of CourierPCL-Bd font.
This is a sample of CourierPCL-BoldItalic font.
This is a sample of CourierPCL-Italic font.
This is a sample of Garamond-Antiqua font.
This is a sample of Garamond-Halbfett font.
This is a sample of Garamond-Kursiv font.
This is a sample of Garamond-KursivHalbfett font.

KPDL Fonts (2)

This is a sample of Helvetica font.
This is a sample of Helvetica-Bold font.
This is a sample of Helvetica-BoldOblique font.
This is a sample of Helvetica-Narrow font.
This is a sample of Helvetica-Narrow-Bold font.
This is a sample of Helvetica-Narrow-BoldOblique font.
This is a sample of Helvetica-Narrow-Oblique font.
This is a sample of Helvetica-Oblique font.
This is a sample of LetterGothic font.
This is a sample of LetterGothic-Bold font.
This is a sample of LetterGothic-Italic font.
This is a sample of Marigold font.
This is a sample of NewCenturySchlbk-Bold font.
This is a sample of NewCenturySchlbk-BoldItalic font.
This is a sample of NewCenturySchlbk-Italic font.
This is a sample of NewCenturySchlbk-Roman font.
This is a sample of Palatino-Bold font.
This is a sample of Palatino-BoldItalic font.
This is a sample of Palatino-Italic font.
This is a sample of Palatino-Roman font.
Τηισ ισ α σαμπλε οφ Σψμβολ φοντ. (Symbol)
Τηισ ισ α σαμπλε οφ ΣψμβολΠΧΛ φοντ. (Symbol MT)
This is a sample of Times-Bold font.
This is a sample of Times-BoldItalic font.
This is a sample of Times-Italic font.
This is a sample of Times-Roman font.
This is a sample of TimesNewRoman font.
This is a sample of TimesNewRoman-Bold font.
This is a sample of TimesNewRoman-BoldItalic font.
This is a sample of TimesNewRoman-Italic font.
This is a sample of Univers-Bold font.
This is a sample of Univers-BoldItalic font.
This is a sample of Univers-Condensed-Bold font.
This is a sample of Univers-Condensed-BoldItalic font.
This is a sample of Univers-Condensed-Medium font.
This is a sample of Univers-Condensed-MediumItalic font.
This is a sample of Univers-Medium font.
This is a sample of Univers-MediumItalic font.
❄♒♓♦ ♓♦ ♋ ♦♋❍◘●♏ □♐ ♆♓■♑♎♓■♑♦♐☼♏♑◆ (Wingdings-Regular)
This is a sample of ZapfChancery-MediumItalic font.
✳❇❇▲ ❇▲ ❁ ▲❁❍❒●❇ ❑❇ ✺❁❒❇✤❇■✳✪❁▼▲ ❇❑■▼✎ (ZapfDingbats)

Chapter 4
Maintenance

This printer is designed to provide years of trouble-free service without the necessity of printer module replacement. However, you must replace the toner container in the printer with a replacement container from a new toner kit. Also, to ensure good print quality, various parts inside the printer must be cleaned at regular intervals.

4.1. Toner Kit Replacement

The toner container in the printer should be replaced as soon as the message display shows `Toner low TK-26 Clean printer` or soon after. If you continue to use the printer, eventually the toner supply will be exhausted at which point the printer will stop printing and the `Replace Toner Clean printer` message will be shown instructing you to install a new toner kit.

If the printer stops and the message `Replace Toner Clean printer` appears in the message display, continue printing after replacing the toner with a new toner kit and cleaning the inside of the printer.

Toner kit replacement interval

The life of the toner container will vary according to the density of print in your documents. If you print documents with an actual toner coverage of approximately 5% (A4 or letter size, landscape feed and with the Ecoprint mode* turned off), the toner container will need replacing approximately once every 7,000** pages.

* Turning the Ecoprint mode ON conserves toner. Refer to *Chapter 2* for details.

** In the case of a new printer in which a toner kit has been installed for the first time, the number of pages that can be printed will be 2,500 or less.

Toner Kit to be Used

The toner kit to be used with this printer is the TK-26. It contains the following:

- ❒ Toner container
- ❒ Waste toner bottle
- ❒ Wiper (lint-free) cloth
- ❒ Grid cleaner
- ❒ 2 plastic bags (for disposal of the old toner container and waste toner bottle)
- ❒ Instructions

(The kit supplied with the printer contains only the toner container and waste toner bottle.)

☛ **We strongly recommend you use only the original Kyocera toner kit. Use of original Kyocera toner assures the intended long term reliability of the printer.**

Supplying Toner

☛ **Before proceeding, take note of the following:**

- ◆ **Also be sure to replace the waste toner bottle when replacing the toner containter.**
- ◆ **After toner kit replacement, be sure to clean the inside of the printer. For details, refer to *Section 4.2*.**
- ◆ **Do not leave floppy disks etc. lying around while performing this maintenance procedure. This procedure tends to raise a little toner dust which can harm magnetic recording media.**
- ◆ **Do not attempt to reuse the waste toner remaining in the toner container.**
- ◆ **Use only the toner kit exclusively designed for the printer. Use of a toner kit intended for use with other printer models may damage the printer and void the warranty.**

To replace the toner container, proceed as follows.

1. Open the printer's top cover all the way.

2. Press the toner container release lever (Green) to release the old toner container from the printer. Remove the old toner container as gently as possible.

☛ **Keep the toner container as level as possible while removing.**

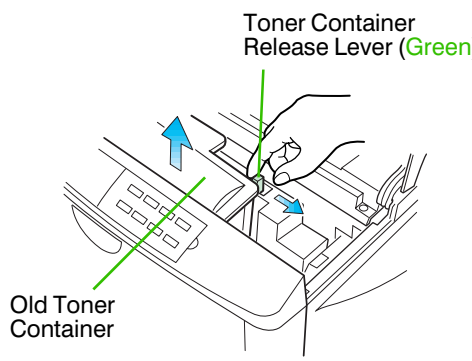

3. Put the old toner container in the plastic bag supplied with the toner kit. Dispose of the toner container.

☛ **The old toner container may be incinerated without the risk of generating harmful gas.**

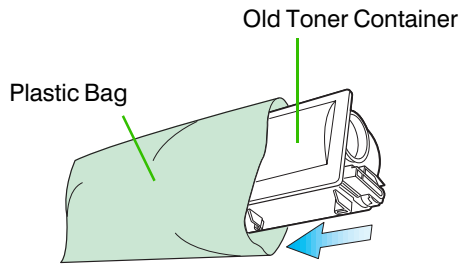

4. Take the new toner container from its bag.

With the label side down, thoroughly shake the toner container (in the direction of the arrow) ten times or more to loosen and mix the toner inside.

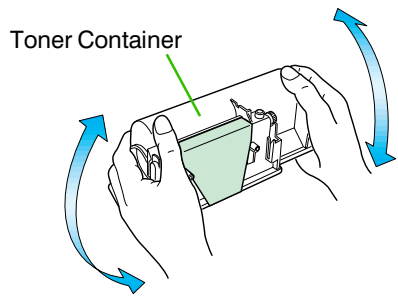

5. The bottom of the toner container is sealed with a plastic strip. Carefully pull the sealing strip off the toner container, making sure not to leak any toner. Dispose of the sealing strip.

☛ **Be sure to peel off the seal on the toner container before installing the toner container on the developer unit.**

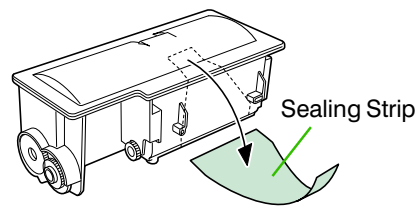

6. Install the toner container on the developer as shown in the figure.

☛ **Insert the toner container straight into the developer unit and press down until it locks securely into place. When inserting the container, you will need to push firmly in order to seat it. Be careful to keep the container straight, and never attempt to pull it upward after you have begun installing it. Doing so could result in damage to the container.**

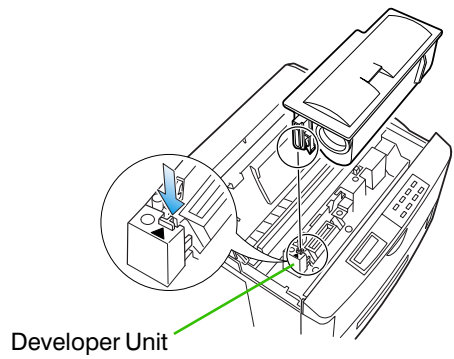

7. When the toner container is installed correctly on the developer, push the top of the toner container unit ("**PUSH HERE**") until it locks in.

☛ **Make sure that the toner container is properly locked in the printer.**

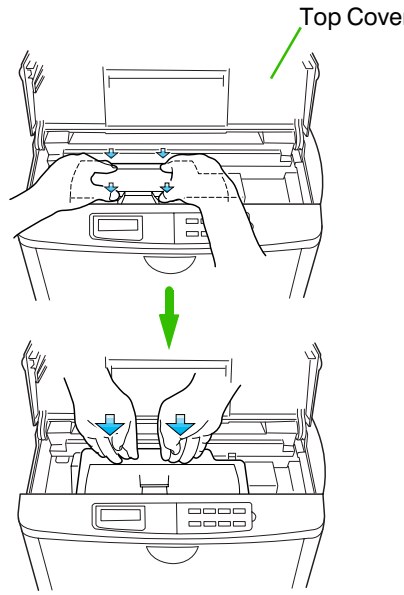

8. Close the top cover as shown below.

☛ **It is necessary to clean the inside of the printer after replacing the toner container. If the toner container is replaced when the message** `Replace Toner Clean printer` **is displayed, the message** `Clean printer Press CONTINUE` **will be displayed after replacement. After cleaning the inside of the printer (See *Section 4.2. Cleaning*), the message will disappear when the CONTINUE key is pressed, and the printer will be ready for printing.**

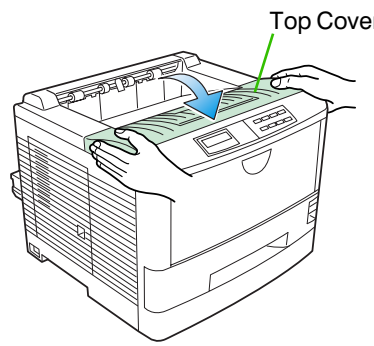

Replace the Waste Toner Bottle

☛ **When replacing the toner container, the used waste toner bottle in the printer should also be replaced with a new one from the new toner kit.**

1. Open the printer side cover.

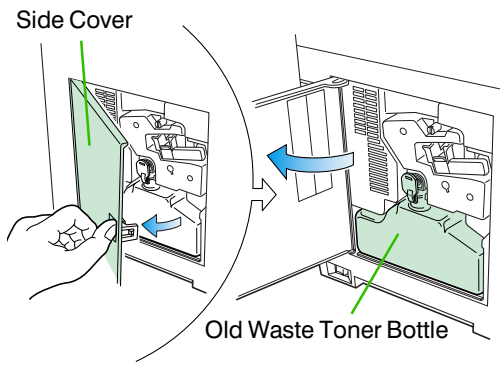

2. Remove the waste toner bottle as shown below.

☛ **Remove the waste toner bottle as gently as possible so as not to scatter the waste toner inside. Do not let the opening of the waste toner bottle face downward.**

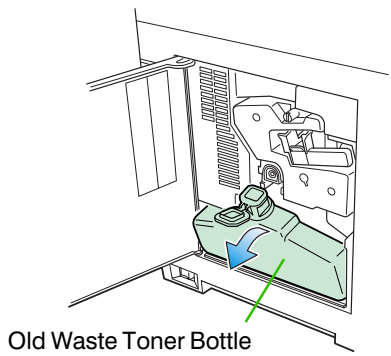

3. Cap the waste toner bottle after removing from the printer.

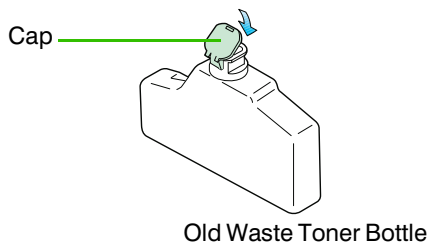

4. To avoid toner spilling, place the capped waste toner bottle in the plastic bag supplied before forwarding to proper disposal.

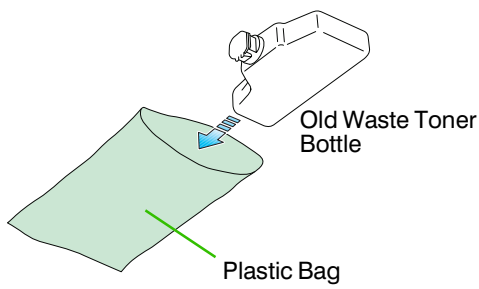

5. Locate the new waste toner bottle in the toner kit, and install in the printer as shown below.

☛ **Do not cap the new waste toner bottle.**

Insert the new waste toner bottle with the bottle tilted slightly towards you as shown in the figure.

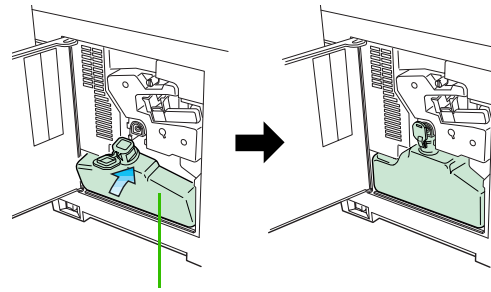

6. After ensuring that the bottle is correctly installed, close the side cover.

☛ **After toner kit replacement, it is necessary to clean the inside of the printer. For details on the cleaning procedure, please read *Section 4.2. Cleaning beginning* on the *next page*.**

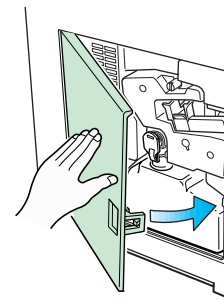

4.2. Cleaning

In addition to the maintenance procedures described on the following pages, the charger wire in the drum unit and paper feed unit should be cleaned from time to time, or whenever print quality problems occur.

To avoid print quality problems, the following printer parts must be cleaned with every toner container replacement.

☞ **If the toner container has been replaced when the message `Replace Toner Clean printer` was displayed, the message `Clean printer Press CONTINUE` will be displayed after replacement. After cleaning the inside of the printer following the procedure shown below, press the CONTINUE key; the message will disappear and the printer will be ready for printing.**

Main Charger Unit

The main charger unit grid should be cleaned when the toner container is changed.

Cleaning the Charger Wire

1. Open the printer side cover.

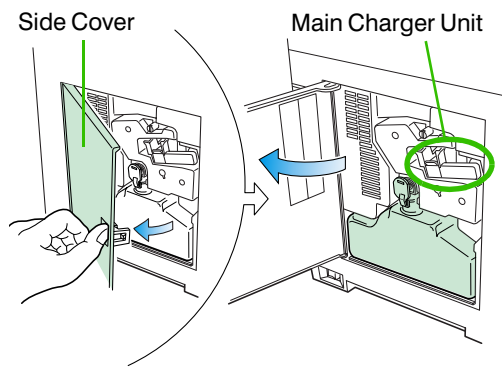

2. Pull the cleaning knob (Green) slowly in and out a few times. This pulls a cleaning pad inside the drum unit along the wire.

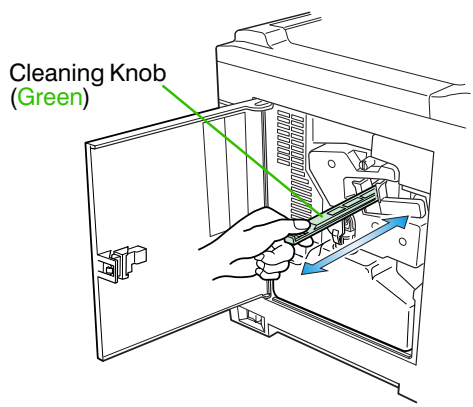

Cleaning the Grid

Clean the grid at the time of toner kit replacement.

1. Take the grid cleaner from protective bag in the new toner kit, and remove the cap.

☛ **The grid cleaner pad is impregnated with water. Perform the following cleaning procedure before the pad dries.**

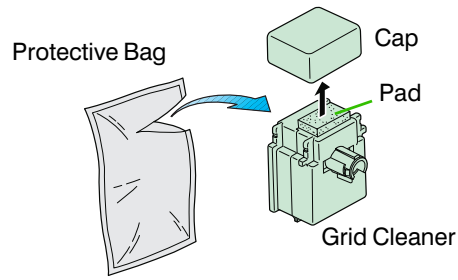

2. Attach the grid cleaner to the printer with the pad uppermost, as shown in the figure.

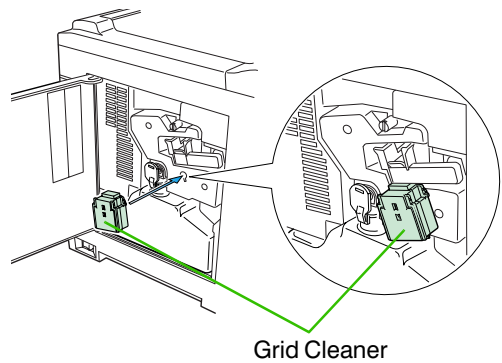

3. After attaching the grid cleaner, repeat the action of slowly pulling out and then pushing back in the main charger unit at least 5 times. It is easier to pull out the main charger for the first time if it is raised slightly, as shown in the figure.

The grid part underneath the main charger is cleaned by this procedure.

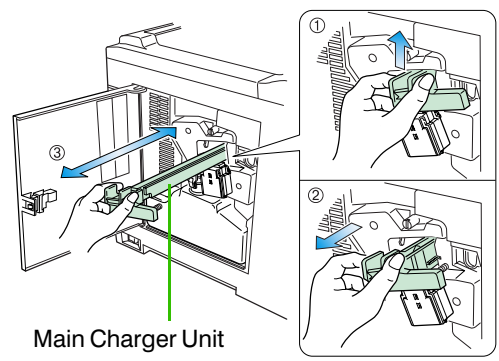

4. When the grid is clean, remove the grid cleaner from the printer and dispose of it. The grid cleaner is not re-usable.

5. After cleaning the charger wire and grid, push the cleaning knob all the way in and close the side cover.

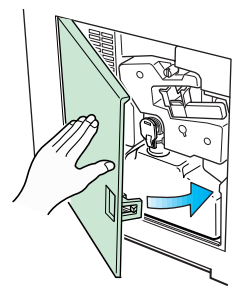

Paper Feed Unit

To avoid print quality problems due to paper dust and debris, clean the paper feed unit in the following manner.

1. Pull the paper feed unit release lever up and draw the paper feed unit all the way out until it stops.

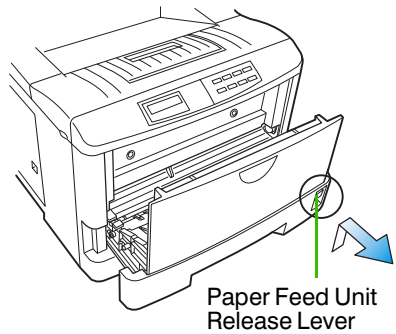

2. Use the supplied cleaning brush to clean the entire length of the saw-toothed separator located behind the transfer roller two or three times. Store the cleaning brush somewhere safe as it will be required again in the future.

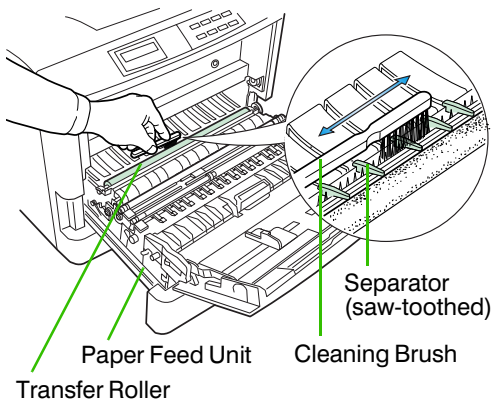

3. Wipe the paper dust on the registration roller and the paper ramp using the wiper cloth included in the toner kit.

☛ **Do not touch the transfer roller (the black roller) when wiping the paper ramp.**

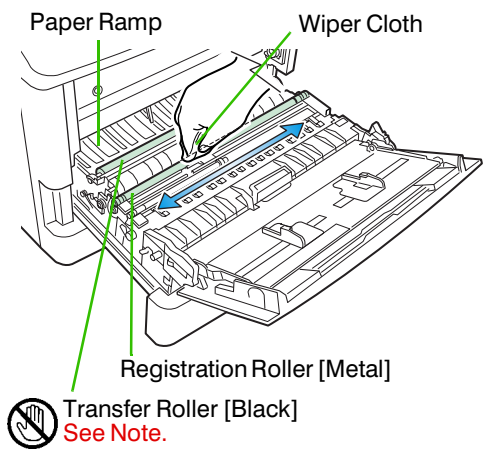

4. After cleaning, securely close the paper feed unit.

Chapter 5
Troubleshooting

This chapter explains how to handle printer problems which may or may not occur. The procedures are easy to follow. If a problem persists after you have completed the appropriate troubleshooting procedures, call for the assistance of a service person.

5.1. General Guide

If the printer does not print

If nothing is displayed on the message display on the front control panel, then you probably have a power problem. See *Section 5.2*.

If the printing is abnormal

With the printer on-line and ready, press the **STATUS** key to print a status page. You can also optimize print quality using the KIR test pattern printed at the bottom of the status page. To adjust the print status, see *Chapter 2*.

- If the result is normal, you may have an interface problem. See *Section 5.3*.
- If the result is not normal, you have a print quality problem. See *Section 5.4*.

If a maintenance message is displayed on the message display:

- See *Section 5.5*. (For a paper jam, see *Section 5.6*.)

If the printer does not print the entire page or indicates `Memory overflow` on its message display, try adding optional memory. To add optional memory, see *Chapter 1*.

5.2. Power Problems

☞ **The printer power rating must be within the voltage range in your country. If in doubt, consult your dealer.**

If nothing happens when you switch the printer's power on, you have a power problem. The symptoms are a dark control panel, no printing, and no fan sound. Proceed as follows.

Check the power switch.

The on position is marked "|".

The off position is marked "O".

Check the power cord.

If the cord is loose at either end, switch power off, plug the power cord in securely, then switch power on again.

Call for the assistance of a service person.

If the above checks do not solve the problem, call for the assistance of a service person.

5.3. Interface Problems

If the printer prints a status page correctly but does not print data from the computer correctly (or at all), there may be an interface problem.

Check the interface (network) cable.

Make sure the cable is plugged in securely at both ends.

Check your file and software.

Try printing a different file, or using a different print command.

Try using a different cable.

Compare the pin assignments listed in *Appendix C* with the specifications of your cable.

Call for the assistance of a service person.

If the above checks do not solve the problem, call for the assistance of a service person.

5.4. Print Quality Problems

Print quality problems range from uneven tone to completely blank output. The trouble-shooting procedure for each type of problem is given below.

If the checks explained in this section do not solve the problem, call for the assistance of a service person.

Completely blank printout

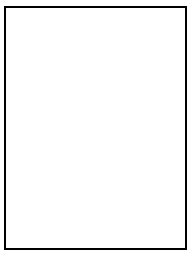

Check the developer unit.

Open the printer top cover and check that the developer unit is inserted correctly and check that the developer's connector is connected properly.

Call for the assistance of a service person.

All-black printout

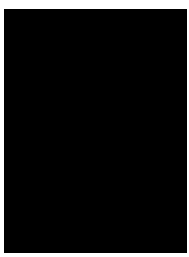

Check the Main Charger Unit

Open the printer side cover and check that the main charger unit is correctly installed.

Call for the assistance of a service person.

Dropouts, horizontal streaks, stray dots

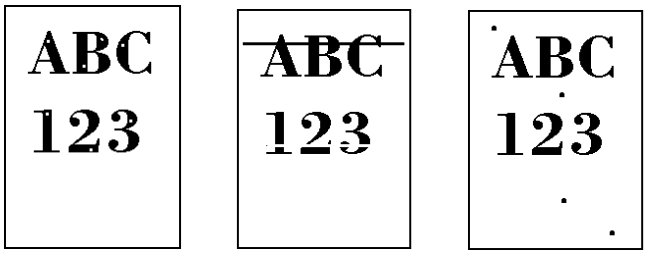

Clean the charger wire.

Open the printer side cover. Pull the green main charger wire cleaning knob slowly in and out a few times. See *Section 4.2*.

Note the spacing of the defects.

If the defects occur at regular intervals, the problem may be due to a scratch or foreign matter on the drum, fuser roller, or transfer roller inside the printer. Call for the assistance of a service person.

Black or white vertical streaks

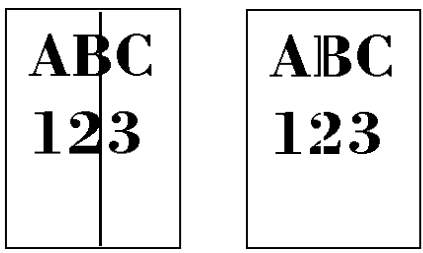

Check the control panel.

If the `Toner low TK-26 Clean printer` message is displayed and the indicator is flashing, install a new toner kit. See *Section 4.1*.

Clean the charger wire.

Open the printer side cover. Pull the green main charger wire cleaning knob slowly in and out a few times. See *Section 4.2*.

Call for the assistance of a service person.

If the above checks do not solve the problem, call for the assistance of a service person.

The image is smeared

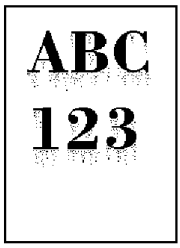

Clean the charger wire

Open the printer's side cover. Pull the green main charger wire cleaning knob slowly in and out a few times. See *Section 4.2*.

Faint or blurred printing

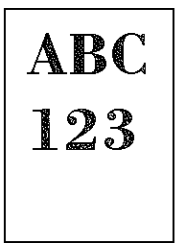

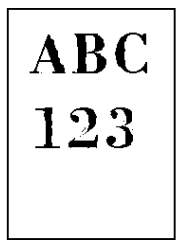

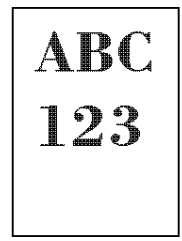

Check the control panel.

If the `Toner low TK-26 Clean printer` message is displayed and the indicator is flashing, install a new toner kit. See *Section 4.2*.

Set the print density from the control panel to a higher level than the current setting. See *Section 2.10*.

Try changing the paper thickness setting on the Mode Select Menu. See *Section 2.3*.

Check the Ecoprint setting.

See *Section 2.14*.

Grey background

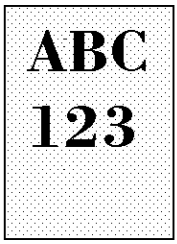

Check the control panel.

If the `Toner low TK-26 Clean printer` message is displayed and the indicator is flashing, install a new toner kit. See *Section 4.2*.

Check the print density.

Display the print density menu from the control panel and select a lighter density setting. See *Section 2.10*.

Clean the main charger wire.

Open the printer's side cover. Pull the green main charger wire cleaning knob slowly in and out a few times. See *Section 4.2*.

Check the main charger unit installation.

Open the printer's side cover. Remove the main charger unit half way out, then reinstall it properly. See *Section 4.2*.

Call for the assistance of a service person.

If the above checks do not solve the problem, call for the assistance of a service person.

Dirt on the top edge or back of the paper

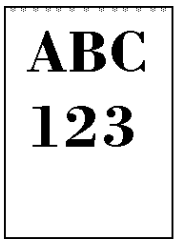

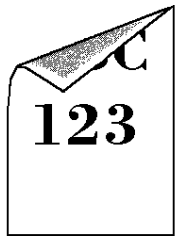

Check the paper chute and the ramp.

Draw out the paper feed unit and check for toner on the paper ramp. Clean the paper ramp (see *Section 4.2.*) using the wiper supplied, or a soft, dry, lint-free cloth.

Check the transfer roller.

If the transfer roller is dirty with toner, try printing several pages. Call for the assistance of a service person.

Characters out of position

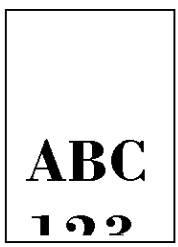

Check the file or program.

See if the problem is caused by incorrect PRESCRIBE 2e commands. If the problem occurs with only one file or program, the most likely cause is a command error.

Call for the assistance of a service person.

If the above checks do not solve the problem, call for the assistance of a service person.

5.5. Indicators and Messages

The tables on the following pages indicate how to respond to problems indicated by the control panel symbolic indicators and messages.

Indicators

Table 5.1 Symbolic Indicators

Indicator	Condition	Corrective Action
	Flashing	• The printer has run low on toner. The toner should be replaced as soon as possible. See *Section 4.2*. • The toner is being replenished. Please wait.
	Lit	Install a new toner kit. See *Section 4.1*.(Toner Empty)
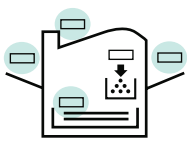	**Fast Flashing**	There is a paper jam. There is a possibility that paper may be jammed at the point indicated by flashing, open and remove any jammed paper. See *Section 5.6*.
	Slow Flashing	The paper has run out in the paper cassette or MP tray. Please insert paper. See *Section 1.4* or *1.5*.
	Lit	This indicates either the current paper feeder or the paper output point.
ATTENTION	**Flashing**	The printer is warming up (`Please wait`) or has insufficient memory available. (`Warning Low memory` will be displayed in the latter case.)
	Lit	Note the maintenance message on the message display and consult *Table 5.2*.

Maintenance Messages

Table 5.2 Maintenance Messages

Message	Corrective Action
Top cover Open	Open the top cover, then close tightly.
Side cover Open	Open the side cover, then close tightly.
Paper feed unit Open	Open the paper feed unit, then close tightly.
Face-down tray paper full	The face-down tray has become full (approx. 350 pages). You must remove all printed pages from the face-down tray.
Add paper (paper source) (paper size)/(paper type) *(paper size) and (paper type) are displayed flashing alternately.	The paper has run out. Supply paper according to the paper source displayed (paper cassette, MP tray, or optional paper feeder).
Cassette not loaded	The cassette is not closed securely, close it tightly.
Cassette size error	The size set for the paper cassette is incorrect. Be sure to correctly set the paper guides and paper stopper inside the cassette to match the paper size being used. See *Section 1.4*.
Paper jam	Open the top cover or the paper feed unit and correct the paper jam (or paper mis-feeding in the cassette). See *Section 5.6*.
Warning Low memory	The printer's internal memory is running low due to the number of fonts and macros downloaded. Print a status page to see how much user memory is left, and try deleting unnecessary fonts and macros. See the PRESCRIBE 2e DELF and DELM commands explanation in the programming manual (CD-ROM).
Option interface Error	A failure has occurred with the option interface. Check the option interface installed on the printer.
Toner low TK-26 Clean printer	Replace the toner container using a new toner kit. See *Section 4.1*.
Replace Toner Clean printer	Replace the toner container using a new toner kit. The printer does not operate when this message is displayed. See *Section 4.1*.
Clean printer Press CONTINUE	Please clean the inside of the printer. See *Section 4.2*. This message will be displayed when replacing the toner container after the message Replace Toner Clean printer has been displayed. After cleaning the inside of the printer, press the **CONTINUE** key and the printer will be ready for printing.

Message	Corrective Action
Replace Waste-toner bottle	Replace the old waste toner bottle with the new one which is included in the TK-26 toner kit. The message will also be shown if the waste toner bottle has become full. The waste toner bottle should be replaced when the message display eventually shows Toner low TK-26 Clean printer. See *Section 4.1*.
Missing Waste-toner bottle	Install the waste toner bottle. See *Section 1.4*. The printer does not operate when this message is displayed.
Load paper (paper size)/(paper type) *(paper size) and (paper type) are displayed flashing alternately.	The paper size does not match. The size of the paper in the cassette is different to the size specified by the application software or by PRESCRIBE 2e. Either put paper of the specified size into the cassette. See *Section 1.4*. If the **CONTINUE** key is pressed, printing will be resumed. However, if more than one sheet is to be printed, the same message will again be displayed from the second sheet onward. You can abandon printing by pressing the **CANCEL** key.
Load Cassette # (paper size)/(paper type) *(paper size) and (paper type) are displayed flashing alternately.	There is data for printing that matches with a paper cassette setting (paper size, paper type), but there is no paper in the cassette. Set paper into the paper source as displayed on the control panel, and press the **CONTINUE** key to restart printing. However, the paper source number (#) is only displayed when there is an optional paper feeder installed. Or, if you want to print from a different paper source press the **FEED** key to display Use alternative? and you can change the source for paper feeding. Further, you can change the paper source by pressing the **FEED** key. After selecting a paper source and pressing the **MODE** key, Paper handling > appears. By pressing the ► key, the paper type settings menu appears. After setting the correct paper type, press the **EXIT** key and printing starts.
Load MP tray (paper size)/(paper type) *(paper size) and (paper type) are displayed flashing alternately.	There is no paper cassette set (paper size, paper type) that matches with the data for printing . Because there is no cassette that matches the data, printing is done from the MP tray. Set paper into the MP tray that matches the paper size and type shown on the display and press the **CONTINUE** button to restart printing. Or, if you want to print from a different paper source press the **FEED** key to display Use alternative? and you can change the source for paper feeding. Further, you can change the paper source by pressing the **FEED** key. After selecting a paper source and pressing the **MODE** key, Paper handling > appears. By pressing the ► key, the paper type settings menu appears. After setting the correct paper type, press the **EXIT** key and printing starts.

Message	Corrective Action
Call service personEn:0123456	Mechanical error (n=0, 1, 2, ...)-Call a service person. The printer does not operate when a message beginning with E is displayed. The total number of pages printed is also indicated.
Call service personFn:0123456	Controller error (n=0, 1, 2, ...)-Call a service person. The printer does not operate when a message beginning with F is displayed. The total number of pages printed is also indicated.

Error Messages

Table 5.3 Error Messages

Message	Corrective Action
Memory overflow Press CONTINUE	The total amount of data received by the printer exceeds the printer's internal memory. Try adding more memory (expansion RAM). Press the **CONTINUE** key to resume printing. You can abandon printing by the **CANCEL** key.
Print overrun Press CONTINUE	The data transferred to the printer was too complex to print on a page. Press the **CONTINUE** key to resume printing. (The page may break in some pages.) You can abandon printing by the **CANCEL** key. **Note: After this message has been displayed, Page protect mode will be On. To maintain optimum use of memory during printing, display** >Page protect **from the control panel, and re-select** Auto. See the *last page* in this manual.
KPDL Error Press CONTINUE	Current print processing cannot continue. To print out a error report, display > Print KPDL errs from the mode select menu, and select On. Press the **CONTINUE** key to resume printing. You can abandon printing by the **CANCEL** key.
RAM DISK error ## Press CONTINUE	Check the error code displayed in the place of ## and refer to the appropriate description below. 01: Abnormal format. Try turning the power off and on again. 02: RAM DISK mode is Off. Turn RAM DISK mode On. 03: Cannot write to the disk system because it is write protected. Remove the write protection. 04: No disk space. Clean up files. 05: Specified file not on disk. 06: No memory for use by disk system. Expand printer memory. 10: Cannot format disk because host data is spooled there. Format the disk after Ready is displayed. 98: Unable to read files during the sorting (file does not exist, or corrupted).

Message	Corrective Action
MEMORY CARD err Insert again	The memory card is accidentally removed from the printer's memory card slot during reading. If you continue reading the memory card, insert the same memory card into the slot again. The printer again reads it from the beginning of the data. **Note: We recommend that you follow the reading procedure from the beginning to ensure correct reading of the memory card.**
Insert the same MEMORY CARD	You have inserted the wrong memory card when the Insert again message was displayed. Remove the wrong memory card from the printer's memory card slot and insert the correct memory card. The printer again reads it from the beginning of the data.
Format error MEMORY CARD	This message appears when the printer is in the ready state and the memory card is not formatted, and therefore cannot be read or written. Follow the procedure on *Section 2.8*. to format the card.
Warning battery MEMORY CARD	This message appears when the printer is in the ready state and the battery in the memory card is low. You can still enter the memory card mode, but the battery should be changed as soon as possible.
Battery error MEMORY CARD	This message appears when the printer is in the ready state and the battery in the memory card is dead, or there is no battery at all. It is not possible to use the memory card mode until you insert a good battery in the card.

Message	Corrective Action
MEMORYCARD err## Press CONTINUE	This message appears when an error occurs during access to the memory card using the PRESCRIBE 2e RWER (ICCD) command or from the printer's control panel. Look at the error code given in place of ## and refer to the corresponding description given below. Note that error codes of 09 and above only result when memory card operations are done fromthe control panel. 01: Data or memory card capacity is too large. • This error code appears if an attempt is made to write more than 32 MB of data to a memory card or if the capacity of the memory card installed in the printer is more than 32 MB. Decrease the data being written to the memory card to less than 32 MB. Note that only the memory card of 32 MB and less can be used by this printer. • This error code appears when a data name not existing on the memory card is specified. Check the data names on the memory card. 02: The memory card does not meet specifications. This memory card cannot be used by this printer. Insert a memory card which can be used by this printer. (See "Memory Card" of *Chapter 2*.) 03: The memory card is not a JEIDA card. Only a JEIDA Ver. 4.2 memory card can be used by this printer. 04: The card is an S-RAM or flash card which cannot be used by this printer. 05: There is no battery in the memory card. Replace the battery in the memory card with a new one. 06: The memory card is write-protected. Cancel the write-protection of the memory card. 07: The memory card requires formatting. Format the memory card from the control panel. 09: The capacity of the memory card is insufficient. This error code appears when an attempt is made to write more data on the memory card than available memory. To halt the writing of data, first stop data transmissions from the computer, and then the printer's **CONTINUE** key. Press the **FORM FEED** key if the message Waiting will appear in the message display. The message display will return to reading Ready. 11: The memory card is full of data items. The number of data items which can be written on the memory card is limited to 127. Pressing the **CONTINUE** key will restore the message Ready in the message display. 13: This is a logical error. Try substituting another flash memory card. 17: The flash memory card cannot be written due to insufficient printer memory. Either delete unnecessary macros and/or fonts stored in the printer, or expand the printer's available memory. 18: This is a write error. Try substituting another flash memory card. (Error codes 13 through 18 apply only to a flash memory card.)

Message	Corrective Action
I/F occupied	This message is displayed when you attempt to use the printer's control panel to change the environmental settings on the interface from which data are presently being received.
Processing PAR FIT A4	FIT (image FITting) flashes to indicate that a loss of raster data occurred when the data was compressed to be fitted within the currently available memory. Flashing FIT extinguishes automatically when the job times out; the printer receives the next data from the host computer; or if you press any key on the printer's control panel. Try adding more memory in the printer to prevent this error.

5.6. Correcting a Paper Jam

The Paper jam message is displayed on the message display when paper becomes stuck in the paper transport system, the paper feed timing is incorrect, or paper fails to feed at all. The jam can be corrected by removing the paper.

The printer goes off-line when the Paper jam message is displayed.

Compare the symbol on the front panel that is flashing to *Figure 5.1* and take the appropriate action listed below:

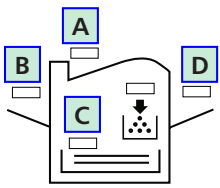

Figure 5.1. Printer Symbol

A	Check the face-down output tray.	If paper is partially fed out into the tray, pull the paper out the rest of the way by hand, then open and close the printer's top cover or the paper feed unit.
	Check the inside of the rear cover.	Open the printer's rear cover. Draw out the paper feed unit. Pull out the paper as shown in *Figure 5.2*. Close the printer's rear cover.
B	Check the face-up output tray.	Refer to *A*, above.
C	Check the paper feed cassette.	If paper is stacked in the paper cassette, not reaching the registration rollers, remove the paper cassette and draw out the paper feed unit. Remove the jammed paper. See *Figure 5.3*. Close the paper feed unit and install the paper cassette in the printer.
	Check the registration roller.	If the paper is caught by the registration rollers, draw out the paper feed unit halfway and remove the jammed paper. See *Figure 5.4*. Return the paper feed unit to the printer.
D	Check the MP tray.	If the paper is stacked in the MP tray, remove the paper by pulling it out. Open and close the printer's top cover or the paper feed unit.

When the jammed paper has been removed, open and close the printer's top cover or the paper feed unit. Then the printer automatically warms up, goes on-line, and continues printing. Depending on the point at which the jam occurred, the printer may or may not print the jammed page.

If paper jams occur frequently, try using a different type of paper, replace with paper from another ream, turn the stack of paper over, or turn the paper the other way around. Read the information in *Appendix B*. Also, look for tiny pieces of paper that may have been torn off and overlooked when the jammed paper was removed.

If you cannot solve the problem by changing the paper, there may be a problem with the printer. Call a service person.

- **When pulling the paper, pull it gently so as not to tear it. Torn pieces of paper are difficult to remove and may be easily overlooked, deterring the jam recovery.**
- **The fuser unit inside the printer is hot. Do not touch it with your hands as it may result in burn injury. Remove jammed paper carefully.**

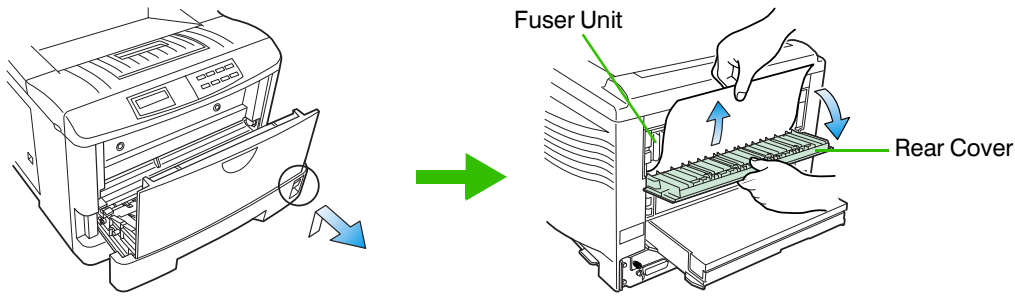

Figure 5.2. Rear Cover

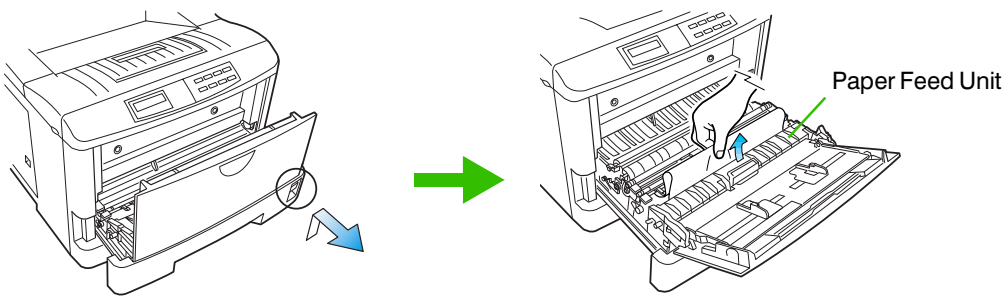

Figure 5.3. Paper Cassette

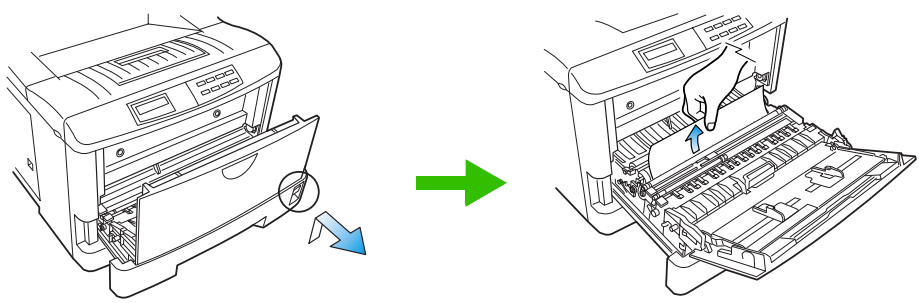

Figure 5.4. Registration Roller

If you cannot find a paper jam by pulling out the paper feed unit and paper cassette as shown in *Figures 5.2* through *5.4* on the previous pages, try checking inside the rear of the printer as shown below.

☞ **Take care when removing paper as the printer interior may be hot and there are protrusions inside which may possibly result in burning or other injury.**

Remove the paper cassette and pull out the paper feed unit until it stops. If you can see the paper jam in the printer, remove it as shown in the figure.

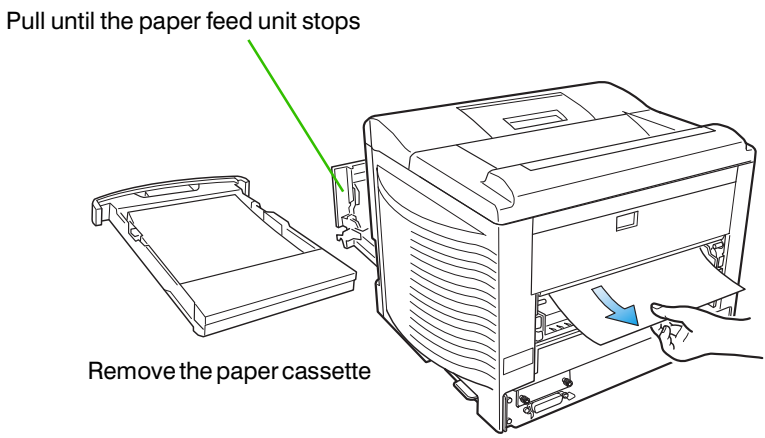

Appendix A
Printer Specifications

Item	Description
Printing method	Electrophotography, laser scan.
Printing speed (when printing multiple copies of the same page)	16 pages/minute (A4 or letter-size paper, landscape feed) 9.5 pages/minute (B4-size paper) 8.5 pages/minute (A3-size paper)
Resolution	2400 dpi equiv. × 600 dpi (600 dpi + KIR)
First print (A4 landscape feed at 23°C)	Approx. 13 seconds Approx. 85 seconds with SLEEP MODE ON
Warm-up time	72 seconds or less (at 23°C, 220 V)
Controller	PowerPC 72 MHz RISC Processor
Main memory	Standard 4 MB, expandable up to 68 MB, DIMM slot × 1
Supported operating systems	Windows 3.1, Windows 95, Windows 98, Windows NT
Supported protocols	TCP/IP, IPX/SPX, EtherTalk
Interfaces	High-speed bidirectional parallel interface × 1 Optional interface slot × 1
Memory card slot	One, PC CARD (PCMCIA 2.1/JEIDA 4.2 [type I, memory card])
Self test	Displays errors occurring during self-test mode
Scanning system	Laser diode, polygon mirror.
Maximum duty cycle	20,000 pages/month (Dry A4 PPC regular paper)
Drum	Organic PhotoConductor drum
Developer	Mono-component dry developer
Main charger	Positive scorotron charger
Transferring	Negative charger roller
Separation	Curvature separation
Drum cleaning	Counter blade
Drum discharging	Illumination by eraser LED array

Item	Description
Fuser	Heat roller
Toner saving	Ecoprint mode
Paper	Plain paper. See *Appendix B* in this manual.
Paper feed trays	Cassette: A3 to A5 universal cassette. Holds approximately 250 sheets of weight 75 g/m^2, thickness 0.1 mm. MP tray: 90 mm × 148 mm to 297 mm × 450 mm. Holds approximately 100 sheets of weight 75 g/m^2, thickness 0.1 mm.
Capacity of output trays	Face-down tray - approximately 350 sheets of weight 75 g/m^2, thickness 0.1 mm. Face-up tray (option: PT-3) - approximately 250 sheets of weight 75 g/m^2, thickness 0.1 mm.
Ambient conditions	Temperature: 10°C to 32.5°C (50°F to 90.5°F) Humidity: 20% to 80% RH Optimum conditions: 23°C (71°F), 60% RH. Altitude: Max. 2000m (6500 feet) Illumination: Max. 1500 lux
Power requirements	220-240 V, 50/60 Hz, max. 2.5 A (Asia) Max. allowable voltage fluctuation: ±10% Max. allowable frequency fluctuation: ±2%.
Power consumption	Max. 610 W During sleeping 18 W
Operating noise (in accordance with ISO 7779 [Bystander Position, sound pressure level at the front])	During printing: LpA = 50 dB (A) During standby: LpA = 37 dB (A) During sleep mode: Immeasurably low
Dimensions	483 mm (19.0") wide × 350 mm (13.8") high × 411 mm (16.2") deep (550 mm with paper cassette mounted)
Weight	21.0 kg (46.2 lb.), main unit only

Appendix B
Paper Selection

B.1. General Guidelines

The printer is designed to print on high-quality copier bond paper (the kind used in ordinary dry copier machines), but it can accept a variety of other types of paper as well within the limits specified below.

☛ **The manufacturer assumes no liability for problems that occur when paper not satisfying these requirements is used.**

Selection of the right paper is important. The wrong paper can result in jams, misfeeds, curl, poor print quality, and paper waste, and in extreme cases can damage the printer. The guidelines given below will increase the productivity of your office by ensuring efficient, trouble-free printing and reducing wear and tear on the printer.

Paper Availability

Most types of paper are compatible with a variety of machines. Paper intended for xerographic copiers can also be used with the printer.

There are three general grades of paper: economy, standard, and premium. The most significant difference between grades is the ease with which they pass through the printer. This is affected by the smoothness, size, and moisture content of the paper, and the way in which the paper is cut. The higher the grade of paper you use, the less risk there will be of paper jam and other problems, and the higher the level of quality your printed output will reflect.

Differences between paper from different suppliers can also affect the printer's performance. A high-quality printer cannot produce high-quality results when the wrong paper is used. Low-priced paper is not economical in the long run if it causes printing problems.

Paper in each grade is available in a range of basis weights (defined later). The traditional standard weights are 16, 20, and 24 pounds ($60g/m^2$ to $90g/m^2$).

Paper Specifications

The following table summarizes the basic paper specifications. Details are given on the following pages.

Table B.1 Specifications

Item	Specification
Weight	60 to 90 g/m² (16 to 24 lbs./ream)
Thickness	0.086 to 0.110 mm (3.4 to 4.3 mils)
Dimensional accuracy	±0.7 mm (±0.0276 inches)
Squareness of corners	90° ±0.2°
Moisture content	4% to 6%
Direction of grain	Long grain
Pulp content	80% or more

B.2. Selecting the Right Paper

Laser printing is a process involving laser light, electrostatic discharge, toner, and heat. In addition, as the paper passes through the printer it undergoes considerable sliding, bending, and twisting motions. A high-quality printing paper matching the printer's requirements withstands all these stresses, enabling the printer to turn out clean, crisp printed copy consistently.

Remember that all paper is not the same. Some of the factors to consider when selecting paper for the printer are as follows:

Condition of the Paper

Avoid using paper that is bent at the edges, curled, dirty, torn, embossed, or contaminated with lint, clay, or paper shreds.

Use of paper in these conditions can lead to illegible printing, misfeeding, and paper jams, and can shorten the life of the printer. In particular, avoid using paper with a surface coating or other surface treatment. The paper should have as smooth and even a surface as possible.

Composition

Do not use paper that has been coated or surface-treated and contains plastic or carbon. The heat of fusing can cause such paper to give off harmful fumes.

Bond paper should contain at least 80% pulp. Not more than 20% of the total paper content should consist of cotton or other fibers.

Paper Size

Cassettes and a MP tray are available for the paper sizes listed in Table B.2. The dimensional tolerances are ±0.7 mm (±0.0276 inches) for the length and width. The angle at the corners must be 90° ±0.2°.

Table B.2 Paper Sizes for Paper Feeding

MP tray	Size	Cassette or MP tray	Size
Monarch	3-7/8 × 7-1/2 inches	Ledger	11 × 17 inches
Business	4-1/8 × 9-1/2 inches	Legal	8.5 × 14 inches
International DL	110 × 220 mm	Letter	8.5 × 11 inches
International C4	229 × 324 mm	ISO A3	297 × 420 mm
International C5	162 × 229 mm	ISO A4	210 × 297 mm
International B5	176 × 250 mm	ISO A5	148 × 210 mm
Executive	7-1/4 × 10-1/2 inches	JIS B4	257 × 364 mm
Commercial 9	3-7/8 × 8-7/8 inches	JIS B5	182 × 257 mm
Commercial 6-3/4	3-5/8 × 6-1/2 inches	Paper sizes other than those indicated in this table can also be fed from the MP tray. The minimum size of manually fed paper is 90 × 148 mm (3.5 × 5.8 inches), fed lengthwise. The maximum size is 297 × 450 mm (11.7 × 17.7 inches).	
ISO A6	105 × 148 mm		
JIS B6	128 × 182 mm		
Hagaki	100 × 148 mm		
Oufuku-Hagaki	148 × 200 mm		
Custom	11.7 × 17.7 inches		

Smoothness

The paper should have a smooth, uncoated surface. Paper with a rough or sandy surface can cause voids in the printed output. Paper that is too smooth, however, can cause multiple feeding and fogging problems. (Fogging is a gray background effect.)

Basis Weight

Basis weight is the weight of a standard quantity of paper. In the traditional system the standard quantity is a ream consisting of 500 sheets measuring 17 × 22 inches each. In the metric system the standard quantity is 1 square meter.

Paper that is too light or too heavy can cause misfeeding, jams, and premature wear of the printer. Uneven paper weight can cause multiple feeds, print defects, poor toner fusing, blurring, and other print quality problems. The proper weight is 60 to 90 g/m^2 (16 to 24 lbs/ream).

Thickness (Caliper)

Thick paper is referred to as high-caliper paper and thin paper as low-caliper paper. The paper used with the printer should be neither extremely thick nor extremely thin. If you are having problems with paper jams, multiple feeds, and faint printing, the paper may be too thin. If you are having problems with paper jams and blurred printing the paper may be too thick. The proper thickness is 0.086 to 0.110 mm (3.4 to 4.3 mils).

Moisture Content

Moisture content is defined as the percent ratio of moisture to the dry mass of the paper. Moisture can affect the paper's appearance, feedability, curl, electrostatic properties, and toner fusing characteristics.

The moisture content of the paper varies with the relative humidity in the room. When the relative humidity is high and the paper absorbs moisture, the paper edges expand, becoming wavy in appearance. When the relative humidity is low and the paper loses moisture, the edges shrink and tighten, and print contrast may suffer.

Wavy or tight edges can cause misfeeding and alignment anomalies. The moisture content of the paper should be 4% to 6%.

To ensure the proper moisture content it is important to store the paper in a controlled environment. Some tips on moisture control are:

- ❒ Store paper in a cool, dry location.
- ❒ Keep the paper in its wrapping as long as possible. Rewrap paper that is not in use.
- ❒ Store paper in its original carton. Place a pallet etc. under the carton to separate it from the floor.
- ❒ After removing paper from storage, let it stand in the same room as the printer for 48 hours before use.
- ❒ Avoid leaving paper where it is exposed to heat, sunlight, or damp.

Other Paper Properties

Porosity: Refers to the density of the paper structure; that is, to how openly or compactly the fibers are bonded.

Stiffness: Limp paper can buckle inside the printer, while paper that is too stiff may bind. Either way the result is a paper jam.

Curl: Most paper has a natural tendency to curl in one direction. The paper should be loaded so that the natural curl is downward, to counteract the upward curl imparted by the printer. Printed sheets will then come out flat. Most paper also has a top and bottom surface. Loading instructions are usually given on the paper package.

Electrostatic properties: During the printing process the paper is electrostatically charged to attract the toner. The paper must be able to release this charge so that printed sheets do not cling together in the output tray.

Whiteness: The contrast of the printed page depends on the whiteness of the paper. Whiter paper provides a sharper, brighter appearance.

Quality control: Uneven sheet size, corners that are not square, ragged edges, welded (uncut) sheets, and crushed edges and corners can cause the printer to malfunction in various ways. A quality paper supplier should take considerable care to ensure that these problems do not occur.

Packaging: Paper should be packed in a sturdy carton to protect it from damage during transport. Quality paper obtained from a reputable supplier is usually properly packaged.

B.3. Special Paper

This section explains printing on special paper. The page printer can use the following types of special paper. In this case, set the media type according to the table below.

Paper type	Media type
Colored paper	Color
Preprinted paper	Preprinted
Overhead projector transparencies	Transparency
Postcards	Cardstock
Envelopes	Envelope
Label	Labels

When using the above types of paper, be sure to use products that are specified for use with photocopiers and/or page printers. Feed paper other than colored paper or pre-printed paper from the MP (multi-purpose) tray.

Use paper that is sold specifically for use with copiers (heat-fusing type). Label paper and envelopes should not be placed in the cassette; they must be fed manually and delivered in the face up stack.

Since the composition and quality of special paper vary considerably, special paper is more likely than white bond paper to give trouble during printing. No liability will be assumed if moisture etc. given off in printing on special paper causes harm to the machine or operator.

☛ **Before purchasing any type of special paper, test a sample on the printer and check that printing quality is satisfactory.**

Specifications for each type of special paper are given below.

Overhead Projection (OHP) Film

OHP film must be able to withstand the heat of fusing during the printing process. It should satisfy the conditions in Table B.3.

Table B.3 OHP Film Specifications

Item	Specification
Tolerance of heat	Must tolerate at least 190°C (374°F)
Thickness	0.100 to 0.110 mm (3.9 to 4.3 mils)
Dimensional accuracy	±0.7 mm (±0.0276 in)
Squareness of corners	90° ±0.2°

To avoid trouble, OHP film must be delivered face-up.
If OHP film jams frequently, pull the top of the sheet very gently as it leaves the printer.

Adhesive-Backed Labels

The basic rule for printing on adhesive labels is that the adhesive must never come into contact with any part of the printer. Adhesive paper sticking to the drum or rollers will damage the printer.

Label paper must be manually fed.

Label paper has a structure comprising three layers, as shown in *Figure B.1*. The top sheet is printed on. The adhesive layer consists of pressure-sensitive adhesives. The carrier sheet (also called the linear or backing sheet) holds the labels until use. Due to the complexity of its composition, adhesive-backed label paper is particularly likely to give trouble in printing.

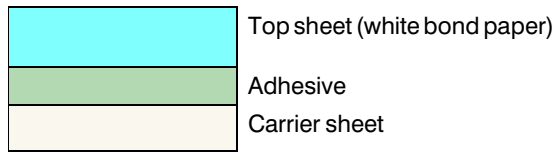

Figure B.1 Adhesive-back label

Adhesive label paper must be entirely covered by its top sheet, with no spaces between the individual labels. Labels with spaces in between are apt to peel off, causing serious jam problems.

Some label paper is manufactured with an extra margin of top sheet around the edge. Do not remove the extra top sheet from the carrier sheet until after printing is finished.

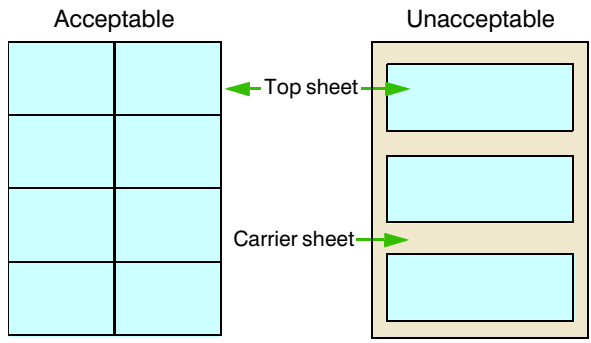

Figure B.2 Label arrangement

Table B.4 lists the specifications for adhesive label paper.

Table B.4 Adhesive Label Specifications

Item	Specification
Weight of top sheet	44 to 74 g/m² (12 to 20 lbs/ream)
Composite weight	104 to 151 g/m² (28 to 40 lbs/ream)
Thickness of top sheet	0.086 to 0.107 mm (3.9 to 4.2 mils)
Composite thickness	0.115 to 0.145 mm (4.5 to 5.7 mils)
Moisture content	4% to 6% (composite)

Envelopes

The printer can print on envelopes using paper with a basis weight of 60 to 79 g/m² (16 to 21 lbs/ream). Envelopes must be manually fed.

An envelope is a more complex object than a single sheet of paper. For this reason, it may not be possible to obtain consistent printing quality over the entire envelope surface.

Many envelopes have a diagonal grain orientation. This orientation is more likely to wrinkle and crease on its way through the printer. Before purchasing envelopes for use with the printer, test a sample to verify the envelope's suitability.

Do not use envelopes having an encapsulated liquid adhesive.

Avoid long printing runs consisting of envelopes only. Extensive envelope printing can cause premature printer wear.

To avoid jamming due to curled envelopes, do not leave more than approximately 10 printed envelopes stacked in the paper trays during multiple printing of the envelopes.

Colored Paper

Colored paper should satisfy the same conditions as white bond paper, listed in Table B.1. In addition, the pigments used in the paper must be able to withstand the heat of fusing during the printing process (up to 200°C or 392°F).

Preprinted Paper

Preprinted paper should have a bond paper base. The preprinted ink must be able to withstand the heat of fusing during the printing process, and must not be affected by silicone oil.

Do not use paper with any kind of surface treatment, such as the type of paper commonly used for calendars.

Recycled Paper

Select recycled paper that meets the same specifications as the white bond paper (See *Table B.1* on *page B-2*.) except whiteness.

☞ **Before purchasing recycled paper, test a sample on the printer and check that printing quality is satisfactory.**

Appendix C
Host Computer Interface

This appendix describes the signals used in the laser printer's parallel, RS-232C/RS-422A interfaces. It also lists pin assignments, signal functions, timings, connector specifications, and voltage levels. The RS-232C/RS-422A protocols are also covered. Finally, it explains the use of the printer in a multi-computer environment.

C.1. Parallel Interface

Parallel interface communication modes

The printer features fast data transmission on the parallel interface. The parallel interface mode can be activated from the printer's control panel (see *Chapter 2, Operating the Laser Printer*) as follows:

☛ **Use a parallel printer cable that complies with the IEEE1284 standard.**

Auto [default]

The printer automatically changes its communication mode to the one the host computer is currently using. Ordinarily, you should leave this setting unchanged.

Nibble (high)

High speed data communication is used in compliance with the IEEE 1284 standard.

Normal

The printer uses the communication method discribed by to the normal definitions of the Centronics interface.

High-speed

This mode enables faster data transmission between the printer and the host computer. (Select this mode if printing problems occur when the printer is connected to a workstation.)

Interface Signals

The pins of the parallel interface connector carry the signals listed in *Table C.1*. Asterisks in the table indicate signals that are active low. The table also indicates whether each signal is incoming or outgoing with respect to the printer.

Table C.1. Parallel Connector Pin Assignments

Pin	In/out	Description
1	In	Strobe* [nStrobe]
2	In	Data 0 [Data 1]
3	In	Data 1 [Data 2]
4	In	Data 2 [Data 3]
5	In	Data 3 [Data 4]
6	In	Data 4 [Data 5]
7	In	Data 5 [Data 6]
8	In	Data 6 [Data 7]
9	In	Data 7 [Data 8]
10	Out	Acknowledge* [nAck]
11	Out	Busy [Busy]
12	Out	Paper Empty [PError]
13	Out	On-Line (Select) [Select]
14	In	Auto-feed [nAutoFd]
15	—	Not connected
16	—	0V DC
17	—	Chassis GND
18	—	+5V DC
19	—	Ground return
20	—	Ground return
21	—	Ground return
22	—	Ground return
23	—	Ground return
24	—	Ground return
25	—	Ground return
26	—	Ground return
27	—	Ground return
28	—	Ground return
29	—	Ground return
30	—	Ground return
31	In	Reset [nInit]
32	Out	Error*, returns error status if FRPO O2=2 [nFault]
33	—	Not connected
34	—	Not connected
35	Out	Power Ready
36	In	Ignored [nSelectIn]

[ ]: Signal names in the Auto mode and the Nibble (high) mode (IEEE 1284). In the Auto and the Nibble (high) mode, these signals are bi-directional.

Detailed descriptions of the signals follow.

Strobe* [nStrobe] (Pin 1)

A negative-going Strobe* pulse causes the printer to read and latch the data on the Data 0 [1] to Data 7 [8] signal lines.

Data 0 [1] to Data 7 [8] (Pins 2 to 9)

These eight signals form the data byte sent from the host computer to the printer. Data 7 [8] is the most significant bit.

Acknowledge* [nAck] (Pin 10)

This negative-going pulse acknowledges the previous character received by the printer.

Busy [Busy] (Pin 11)

This signal is high when the printer is busy and low when it is able to accept more data.

Paper Empty [PError] (Pin 12)

This signal goes high when the printer runs out of paper.

On-Line [Select] (Pin 13)

This signal is high when the printer is on-line and low when the printer is off-line. It goes low when the upper unit is raised, or when the **ON LINE** key is pressed to set the printer off-line.

+5V DC (pin 18)

This line is connected to the printer's +5V DC line (+5V ±0.5V, 250 mA [Serial and Parallel total] maximum, fused.)

Reset [nInit] (Pin 31)

This signal is used in the standard Centronics interface to enable the computer to reset the printer.

Error* [nFault] (Pin 32)

When the high-speed parallel line control is on (FRPO O2=2), this line returns error status.

☞ **The Paper Empty, On-Line, and Error* signals are not used unless enabled by the FRPO command (O2 parameter).**

Auxiliary output 1 (Pin 33)

This signal line is not used.

Power Ready (Pin 35)

This signal is high when the printer's power is on.

C.2. RS-232C/RS-422A Interface (Option)

Mounting the optional serial interface kit (IB-10) to the printer enables connection to a computer with a RS-232C or RS-422A standard serial interface.

RS-232C interface

Interface Signals

The pins of the printer's RS-232C interface connector carry the signals listed in *Table C.2*. The table also indicates whether each signal is incoming or outgoing with respect to the printer.

Table C.2. RS-232C Signal Pin Assignments

Pin	In/out	Signal	Description
1	–	FG	Frame ground
2	Out	TXD	Transmit Data
3	In	RXD	Receive Data
4	Out	RTS	Request To Send
5	In	CTS	Clear To Send
6	In	DSR	Data Set Ready
7	–	SG	Signal Ground
20	Out	DTR	Data Terminal Ready

Brief descriptions of the signals follow.

FG - Frame Ground - (Pin 1)

This pin is connected directly to the printer frame.

TXD - Transmit Data - (Pin 2)

This output carries asynchronous data sent by the printer to the computer. It is used mainly in handshaking protocols.

RXD - Receive Data - (Pin 3)

This input carries serial asynchronous data sent by the computer to the printer.

RTS - Request To Send - (Pin 4)

This output is always held high (above 3 volts).

CTS - Clear To Send - (Pin 5)
DSR - Data Set Ready - (Pin 6)

Unused.

SG - Signal Ground - (Pin 7)

All signals can transmit between the printer and the host computer to send each signals with a signal ground.

DTR - Data Terminal Ready - (Pin 20)

This output is used as a buffer nearly-full handshake line. It is held high (above 3 volts) when the buffer can accept more data.

RS-232C Interface Voltage Levels

The voltage levels of the interface signals conform to EIA RS-232C specifications. SPACE is from 3 volts to 15 volts. MARK is from -3 volts to -15 volts. Voltages between -3 volts and 3 volts are undefined.

RS-422A interface

The serial interface of this printer was set to RS-232C mode before leaving the factory. However, by changing the jumper connector on the main circuit board, the interface can be changed to RS-422A mode.

In RS-232C mode, the printer can be connected to a personal computer (or similar device) equipped with an RS-232C serial interface. (The serial interface is set to RS-232C before leaving the factory.)

In RS-422A mode, the printer can be connected to a personal computer (or similar device) equipped with an RS-422A serial interface.

☛ **The changing of the main circuit board jumper connector should be carried out only by a Kyocera authorized dealer or Kyocera certified technician. Kyocera shall not be liable for damage due to improper changing of this main circuit board jumper connector.**

Interface Signals

The pins in the printer's RS-422A interface connector carry the signals listed in *Table C.3*.

Table C.3. RS-422A Signal Pin Assignments

Pin	In/out	Signal	Description
1	–	FG	Frame ground
3	In	RDA	Receive data Inverted
7	–	SG	Signal ground
9	Out	SDA	Send data Inverted
10	Out	SDB	Send data
18	In	RDB	Receive data

Overview of Signals (RS-422A)

FG - Frame Ground - (Pin 1)

This pin is connected directly to the printer frame.

RDA - Receive Data Inverted - (Pin 3)
RDB - Receive Data - (Pin 18)

These pins carry asynchronous data sent from the computer to the printer. (differential input)

SG - Signal Ground - (Pin 7)

All signals can transmit between the printer and the host computer to send each signals with a signal ground.

SDA - Send Data Inverted - (Pin 9)
SDB - Send Data - (Pin 10)

These pins carry asynchronous data sent from the printer to the computer. (differential output)

+5V DC (Pin 11)

This line is connected to the printer's +5V DC line (+5V ±0.5V, 250 mA [Parallel and Serial total] maximum, fused).

RS-422A interface voltage levels

The interface signal voltage levels conform with the EIA RS-422A standard. The differential voltage varies from 200 mV to 6V.

SERIAL Connector

The connector marked "**IOIOI**" (RS-232C/RS-422A) on the rear panel is a DB-25S connector. Use a DB-25P connector (or equivalent) for the connector on the cable.

C.3. RS-232C/RS-422A Protocol

A protocol is a set of rules the computer follows in sending data to the printer. The RS-232C/RS-422A parameters are stored in battery backed-up memory. They are indicated on the status printout. They can be changed by the FRPO (firmware reprogram) command described in the *Programming Manual*. The parameters and their identification codes are given below.

H1: Baud rate

Parameter value	Baud rate
12	1200
24	2400
48	4800
96	9600
19	19200
38	38400
57	57600
11	115200

The factory setting is 9600 baud.

H2: Data bits

7 or 8, factory-set to 8.

H3: Stop bits

1 or 2, factory-set to 1.

H4: Parity

Parameter value	Meaning
0	None
1	Odd
2	Even
3	Ignore

The factory setting is "None" (0 on the status printout).

H5: Protocol logic

Parameter value	Meaning
0	Combination of 1 and 3 below
1	DTR/DSR, positive logic
2	DTR/DSR, negative logic
3	XON/XOFF
4	ETX/ACK
5	XON/XOFF recognized only as protocol

The factory setting is 0.

H6: Buffer nearly-full threshold

This is a percentage from 0 to 99. The factory setting is 90.

H7: Buffer nearly-empty threshold

This is a percentage from 0 to 99. The factory setting is 70.

The factory settings of the buffer nearly-full and nearly-empty thresholds (H6 and H7) are subject to change without notification.

The gap between the nearly-full and nearly-empty thresholds allows the computer to send a fairly large amount of data in a continuous stream.

H8: Received-data buffer size

This is the size of the input buffer, specified in units of 10K bytes. The factory-set value is 6 meaning 60K bytes.

☞ **Since DTR/DSR protocol is not used with the RS-422A standard, select a parameter value other than 0, 1, or 2 for the H5 setting when using the RS-422A interface.**

PRESCRIBE 2e FRPO D0 command

The PRESCRIBE 2e FRPO D0 command is provided to allow manipulating XON/XOFF when an error has occured on the serial interface. The following table summarizes the error status corresponding to different D0 values.

		Serial interface error	
		error not handled	**error handled**
Timing of XON transfer to host while Ready or Waiting	XON sent every 3-5 seconds	D0 = 0 (default)	D0 = 1
	XON not sent	D0 = 10	D0 = 11

C.4. RS-232C Cable Connection

Preparing an RS-232C Cable

After obtaining an RS-232C cable, check that it is wired correctly, referring to the pin assignment table in *Appendix C*. If you have an IBM communication adapter cable type 1502067, you will have to resolder the wiring at the printer end of the cable. The procedure is as follows.

1. Unscrew the plastic cover from the printer end of the cable.
2. Next to each of the wires inside the cable is a bare shield wire. Solder all these shield wires together into a single bundle.
3. Using a section of flat wire about 3 mm wide and 15 mm long, connect the bundle of shield wires to the metal facing of the connector. Check that the solder connections are secure.
4. Desolder wires 2 and 3, then resolder them in crossed configuration. Solder wire 2 to pin 3 and wire 3 to pin 2. Cover the solder joints with thermofit tube.
5. Cut wires 4, 5, 6, and 20.
6. Solder wires 5 and 6 together and connect them to pin 20. Cover the solder joints with thermofit tube. Leave wire 4 unconnected.
7. Tape all remaining loose ends, or seal them with thermofit tube.
8. Screw the plastic cover back on.

Connecting the Printer to the Computer

1. Check that the power of both the printer and computer is switched off.
2. Discharge yourself by touching a metal object such as a doorknob.
3. Remove the plastic cap from the printer's RS-232C interface connector.
4. Plug the printer end of the RS-232C interface cable into the printer's RS-232C connector and screw it in place.
5. Plug the other end of the cable into the computer's RS-232C interface connector.
6. Switch on the printer's power.
7. The printer's RS-232C parameters are factory-set to the following values:

   Baud rate=9600 bps, Data bits (character length)=8 bits, Stop bits=1, Parity=None

   The two RS-232C protocols are XON/XOFF and DTR. The printer performs both of them simultaneously, using positive logic for DTR.

   If you are uncertain as to the printer's current parameter settings, you can reset them to the values listed above by following the manner described in the last page in this manual.

8. Set the computer to the same parameters as the printer. On many computers this can be done by setting DIP switches before power is turned on. Another method is as follows:

With Windows 95 or Windows 98, make settings as follows.

1. Click on *Start* with the mouse on the Windows 95/98 Task Bar, and align the cursor with *Settings*. Click on *Control Panel* among the items displayed.

2. The control panel folder will open. Double click on *System*.

3. *System Properties* will open. Click on the *Device Manager* tab, then click on the COM port to be used.

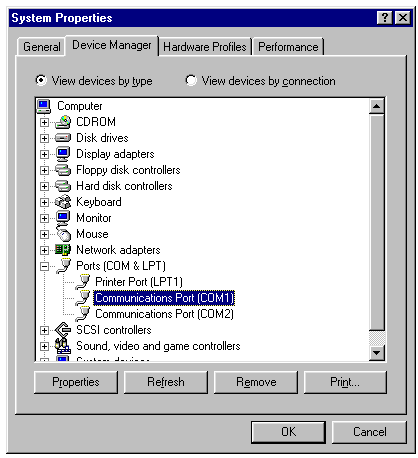

4. Click *Properties*

5. The Properties sheet is displayed for the selected COM port. Click on the *Port Settings* tab and set the port properties.

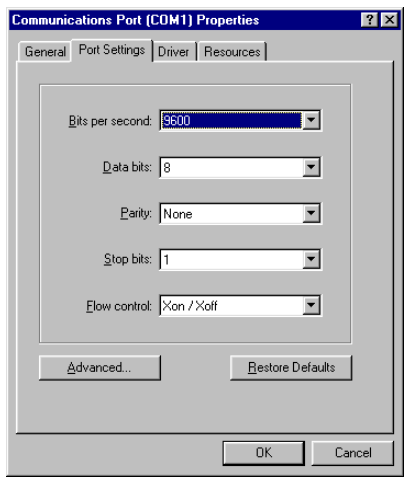

6. After setting the properties, click *OK*.

In DOS, enter the following commands:

```
C:\>MODE    COM1:96,N,8,1,P
C:\>MODE    LPT1:=COM1
```

To test the interface, then enter:

```
CTRL  P
C:\>DIR
CTRL  P
```

The software settings made by the procedures above are temporary. On most computers, permanent settings must be made with DIP switches.

If you want to use a different baud rate or change any of the other RS-232C parameters, you can use the printer's FRPO (firmware reprogram) command. See the *Programming Manual* for details.

Index

A

Adhesive-Backed Labels *B-7*
Automatic Manual
  Feeding *1-25*

B

Buzzer *2-40*

C

Canceling Printing *2-9*
Centronics *1-17*
Cleaning *4-8*
  Grid Cleaner *4-8*
  Main Charger Unit *4-8*
  Paper Feed Unit *4-9*
Colored Paper *B-8*
Control keys
  - key *2-5*
  + key *2-5*
  CANCEL key *2-5*
  CONTINUE key *2-5*
  ENTER key *2-5*
  EXIT key *2-5*
  FEED key *2-5*
  FORM FEED key *2-5*
  MODE key *2-5*
  ON LINE key *2-5*
  STACK key *2-5*
  STATUS key *2-5*
Control Panel *2-1*
  control keys *2-5*
  COPY indicator *2-3*
  INTERFACE
    indicator *2-2*
  message display *2-2*
  PAPER SIZE
    indicator *2-3*
  RESOLUTION
    indicator *2-2*
  symbolic indicators *2-4*

D

Developer unit *1-9*
DIMM
  Removing *1-32*
  Socket *1-31*
  Testing *1-32*
Downloadable font *3-1*

E

Ecoprint Mode *2-38*
ECO-PRODUCT *ix*
Emulation *2-14*
Envelopes *B-8*
Error massages
  KPDL Error Press
    CONTINUE *5-11*
Error messages
  Battery error
    MEMORY CARD *5-12*
  Format error
    MEMORY CARD *5-12*
  I/F occupied *5-14*
  Insert the same
    MEMORY CARD *5-12*
  MEMORY CARD err
    Insert again *5-12*
  Memory overflow Press
    CONTINUE *5-11*
  MEMORYCARD err##
    Press CONTINUE *5-13*
  Print overrun Press
    CONTINUE *5-11*
  Processing
    PAR FIT A4 *5-14*
  RAM DISK error ##
    Press CONTINUE *5-11*
  Warning battery
    MEMORY CARD *5-12*
Expansion memory *1-29*
extension cord *1-2*

F

Face-up Output Tray *1-16*
Feed Selection *2-8*
Font
  identifying
    characteristics *3-1*
FormFeed TimeOut *2-2*

G

Grid cleaner *4-2*

I

Indicators *2-4, 5-8*
  ATTENTION *2-4, 5-8*
  DATA *2-4*
  ON LINE *2-4*
Installing the Printer *1-1*
  Basic requirements *1-2*
  Clearance *1-1*
  location *1-1*
  Places to Avoid *1-2*
Interfaces *1-16*
Internal Fonts *3-1*

K

KIR *2-35*
  levels *2-35*
  Selecting KIR Mode *2-37*
  setting *2-35*
  test page *2-35*
Kyocera Digital Library
  CD *xiv*
  User's Manual *xiv*
Kyocera PrintMonitor *xi*

M

Main Circuit Board *1-30*
Maintenance messages
  Add paper *5-9*

Call service personEn *5-11*
Call service personFn *5-11*
Cassette not loaded *5-9*
Cassette size error *5-9*
Clean printer Press CONTINUE *5-9*
Face-down tray paper full *5-9*
Load Cassette # *5-10*
Load MP tray *5-10*
Load paper *5-10*
Missing Waste-toner bottle *5-10*
Option interface Error *5-9*
Paper feed unit Open *5-9*
Paper jam *5-9*
Replace Toner Clean printer *5-9*
Replace Waste-toner bottle *5-10*
Side cover Open *5-9*
Toner low TK-20 Clean printer *5-5, 5-6, 5-9*
Top cover Open *5-9*
Warning Low memory *5-9*
Memory Card *3-1*
Delete *2-26*
Format *2-27*
Handling *1-28*
Insert *2-22*
insert *1-27*
List of data names *2-28*
partition *2-28*
Read data *2-24*
Read fonts *2-23*
Read macros *2-24*
remove *1-27*
RWER (ICCD) command *5-13*
Writing data *2-25*
Memory Expansion *1-29*
Message Display *2-2*
Mode Selection Menu *2-14*
MP Tray *1-23*
Cassette Mode *1-25*
Feeding Envelopes *1-26*
First Mode *1-25*
Paper Guides *1-24*
Sub Tray *1-23*

N

Names of Parts
Front View *1-6*
Interior View *1-7*
Rear View *1-7*

O

ON LINE *2-8*
Options *xii*

P

packing *1-4*
Paper
adhesive labels *B-7*
Colored Paper *B-8*
Envelopes *B-8*
OHP film *B-6*
Preprinted Pape *B-8*
Recycled Paper *B-8*
Selection *B-1*
Size *B-4*
Smoothness *B-4*
Special Paper *B-6*
Specifications *B-2*
Thickness *B-4*
type *2-29*
Weight *B-4*
Paper Cassette *1-12*
Paper Feed Unit Release Lever *1-6, 4-9*
Paper Guides *1-13*
Paper Jam *5-15*
Paper Stopper *1-13*
Parallel Interface *2-2, 2-17, C-1*
Pin Assignments *C-2*
transmission modes *2-14*
Parallel interface *1-17*
Clips *1-17*
Partitions *2-28*
PDF417 *xi, xiv*
Plastic bag *4-3*
Please wait *2-2*
Power Cord *1-17*
Power requirements *1-2*
Power Switch *2-6*
Preprinted Paper *B-8*
PRESCRIBE 2e *xiv*
PRESCRIBE 2e command *xiv, 2-5, 5-7*
FRPO D0 command *C-8*
RES command *2-9*
Print Density *2-32*
Printer Driver *1-19*
Printer Specifications *A-1*
Processing *2-2*
Protocol *C-7*

R

RAM DISK *2-21*
Ready *2-2*
Recycled Paper *B-8*
Registration Roller *4-9*
Resolution *2-2*
Resource Protection *2-39*
RS-232C *C-4*
Cable *C-9*
Pin Assignments *C-4*
RS-232C/RS-422A *2-2, C-4*
RS-422A *C-5*
Pin Assignments *C-5*

S

Self test *2-2*
Serial Interface *2-2, C-4*
PRESCRIBE 2e FRPO D0 command *C-8*
Protocol *C-7*
RS-232C mode *C-5*
RS-422A mode *C-5*
Set up *1-8*
Emulation Mode *1-18*
face-up output tray *1-16*
interface *1-16*
Paper *1-12*
Paper Cassette *1-12*
power cord *1-17*
Printer driver *1-19*
Toner Container *1-9*
Simple Network Management Protocol (SNMP) *xi*
Sleep Timer *2-33*
Sleeping *2-2*
Sleeping mode *2-33*
Soft font *3-1*
Status Page *1-17*
Status page printing *5-1*

Status page printing *2-10*
Switching Online/Offline *2-8*

T

Temperature and
    humidity *1-2*
TK-26 *4-1, 4-2*
Toner Container *4-2*
    Dispose *4-3*
    Installing *1-9*
    life *4-1*
    release lever *4-2*
    replacement *4-1*
    sealing strip *1-9, 4-3*
Toner Kit *4-1*
Top Cover *1-9, 1-10*
Troubleshooting
    Error messages *5-11*
    guidelines *5-1*
    Indicators *5-8*
    Interface *5-2*
    Maintenance messages *5-9*
    Power *5-2*
    Print Quality *5-3*
two-dimensional stacked bar
    code *xi*
Typeface *3-1*

W

Waiting *2-2*
Waste Toner Bottle *1-10*
Windows *1-19*

Mode Select menu

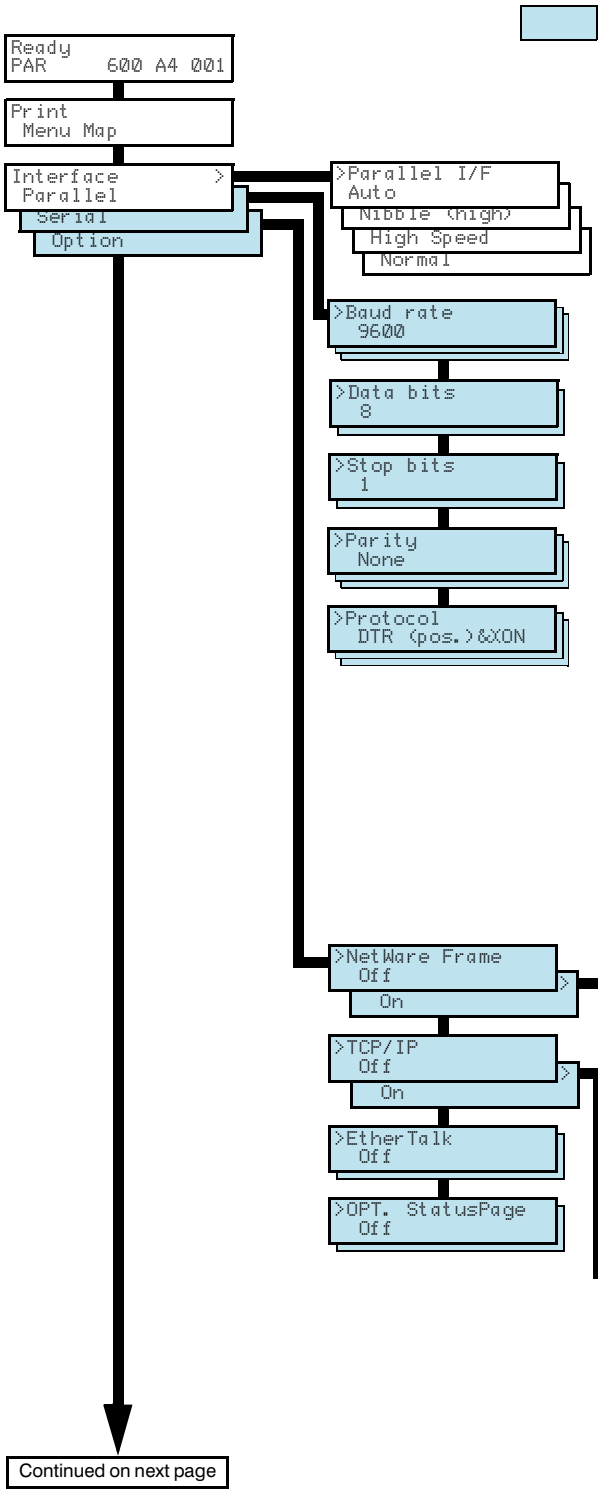

Basic Operations During Mode Selection

This diagram gives quick reference to all menu options and their sequence of selection. Use this description in combination with *Chapter 2 Mode Selection Menu*.

1. Press the **MODE** key to enter Mode Selction mode.
2. Press the **+** or **–** key repeatedly until the message display indicates the desired item.
3. Press the ► key to move to a submenu. Press the ◄ key to return.
4. Press the **ENTER** key once the desired menu appears. ? will flash, and the current setting can be changed.
5. Press the **+** and **–** key to select the desired setting.
6. Press the **ENTER** key.
   If you want to re-enter a setting, press the **CANCEL** key before pressing the **ENTER** key.
7. Press the **EXIT** key. This will enable currently selected settings.

Continued from Previous page

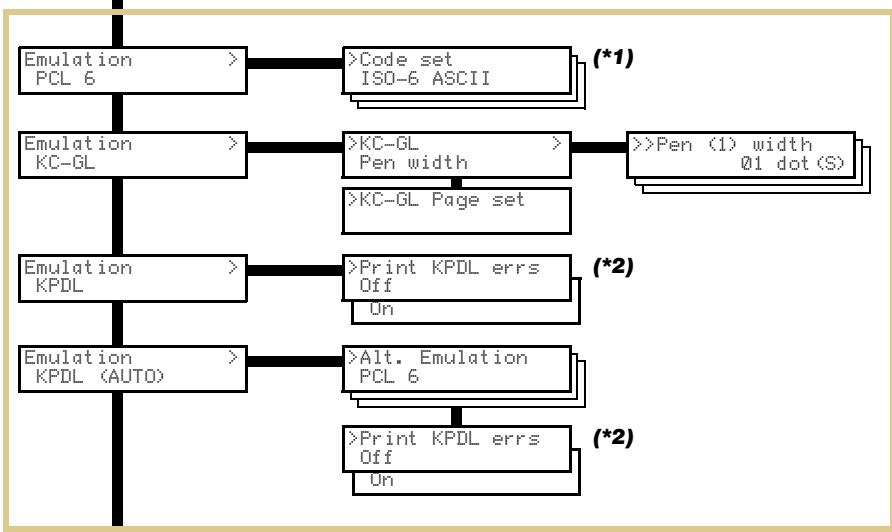

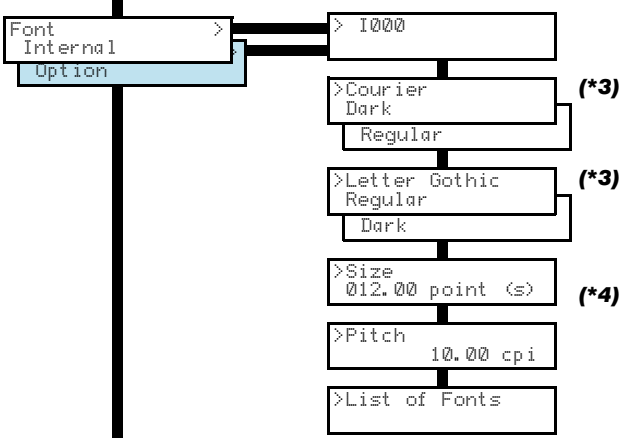

Continued on next page

***1:** Depending on the emulation selected, the following set >Code sets are available.

***2:** The printer can be set to print error data during KPDL emulation. If this is set to On, error data will be printed if trouble occurs during printing. This is set to Off before leaving the factory.

***3:** You can select either Courier or Letter Gothic. Any font can be selected as Dark or Regular. These fonts are displayed when the Font menu is Internal.

***4:** The >Size menu is not available for the Courier and Letter-Gothic fonts. The >Pitch menu is displayed instead for these fixed width fonts.

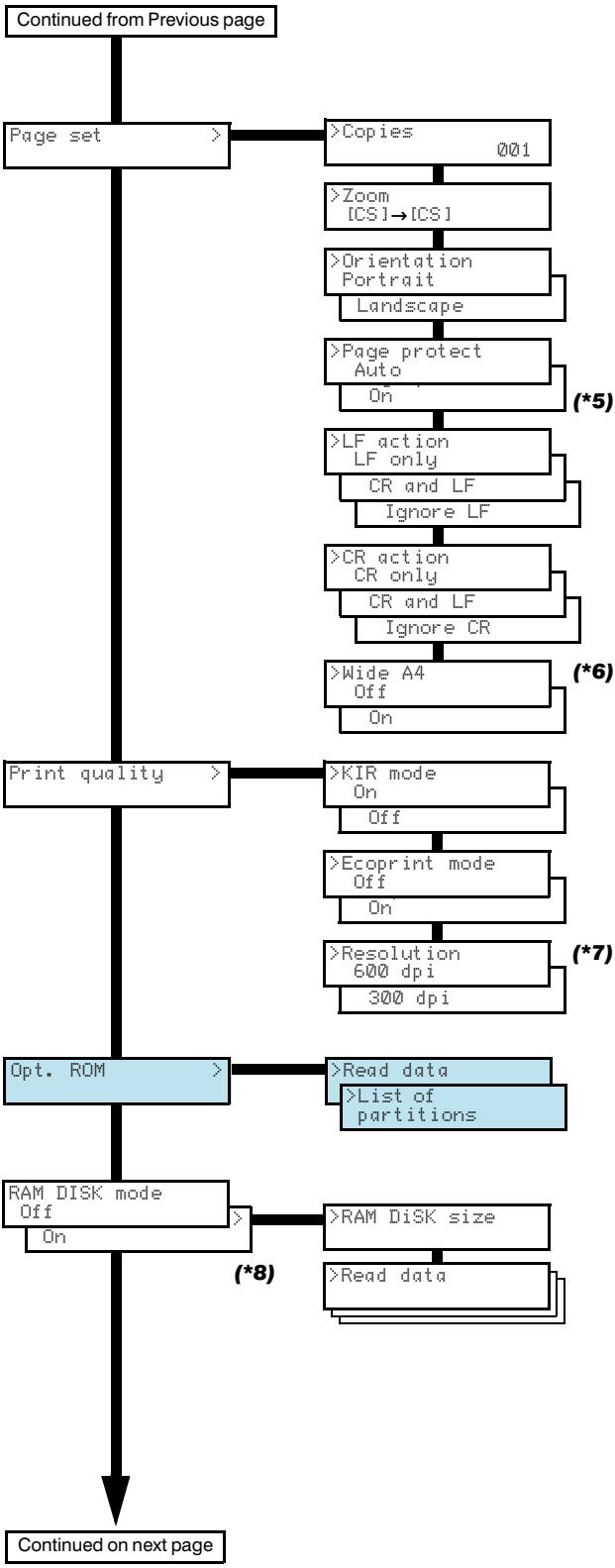

***5:** Although Auto is the default setting and this menu does not usually appear, page protection mode will be forcibly set to on if a Print overrun Press CONTINUE error occurs due to insufficient printer memory. Be sure to return this setting to Auto in order to maintain high printer memory efficiency.

***6:** Turning this to ON increases the maximum number of characters that can be printed in a line for an A4 page (78 characters at 10 pitch) and likewise increases the maximum per line on Letter size paper (80 characters at 10 pitch). (Only PCL 6 emulation)

***7:** This sets the resolution for printing.

***8:** The RAM DISK mode menu is not displayed when an optional hard disk unit is installed.

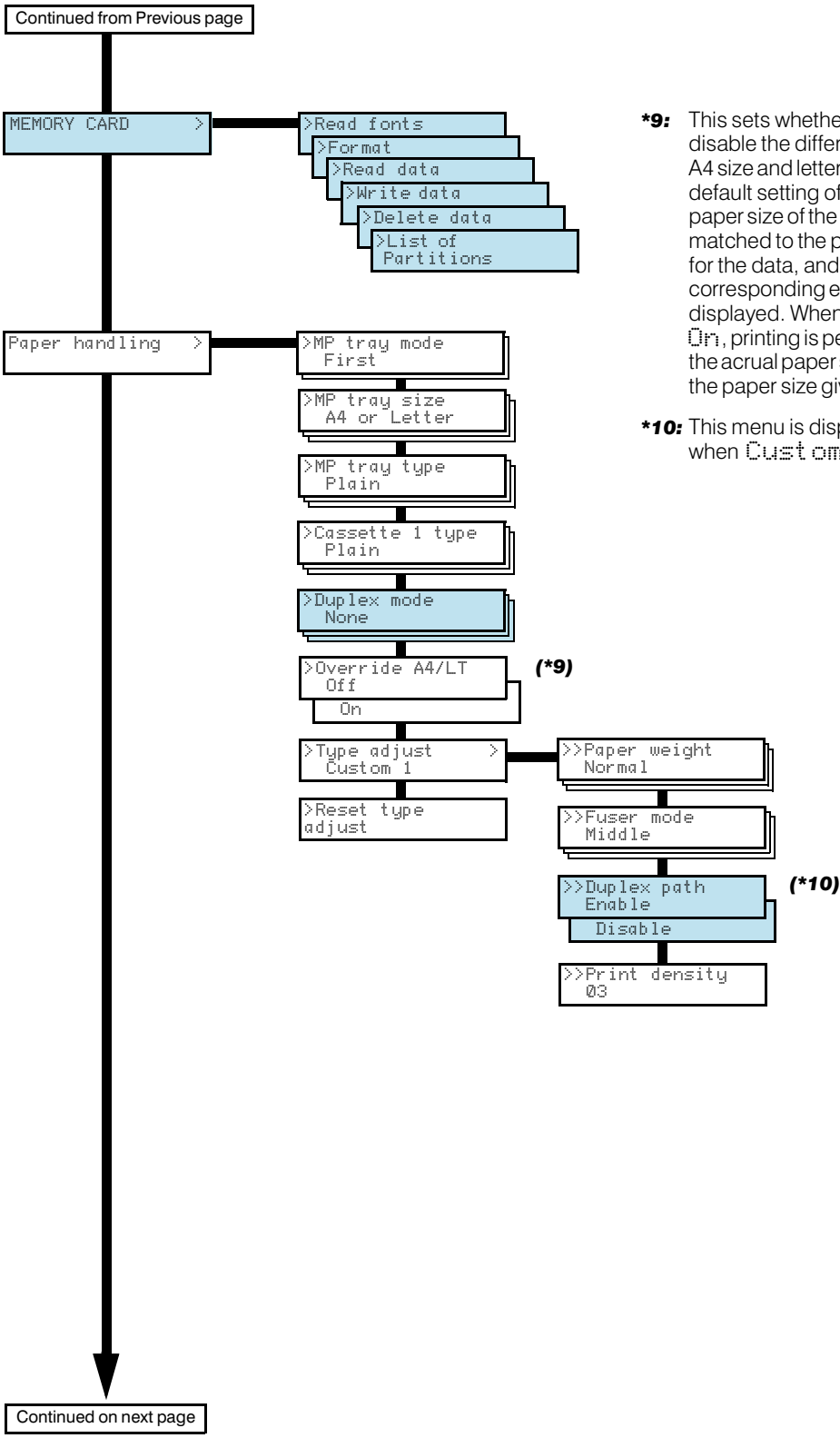

***9:** This sets whether to enable or disable the difference between A4 size and letter size. Under the default setting of Off, the paper size of the paper source is matched to the paper size given for the data, and if these differ a corresponding error message is displayed. When this is set to On, printing is performed even if the acrual paper size differs from the paper size given for the data.

***10:** This menu is displayed only when Custom # is selected.

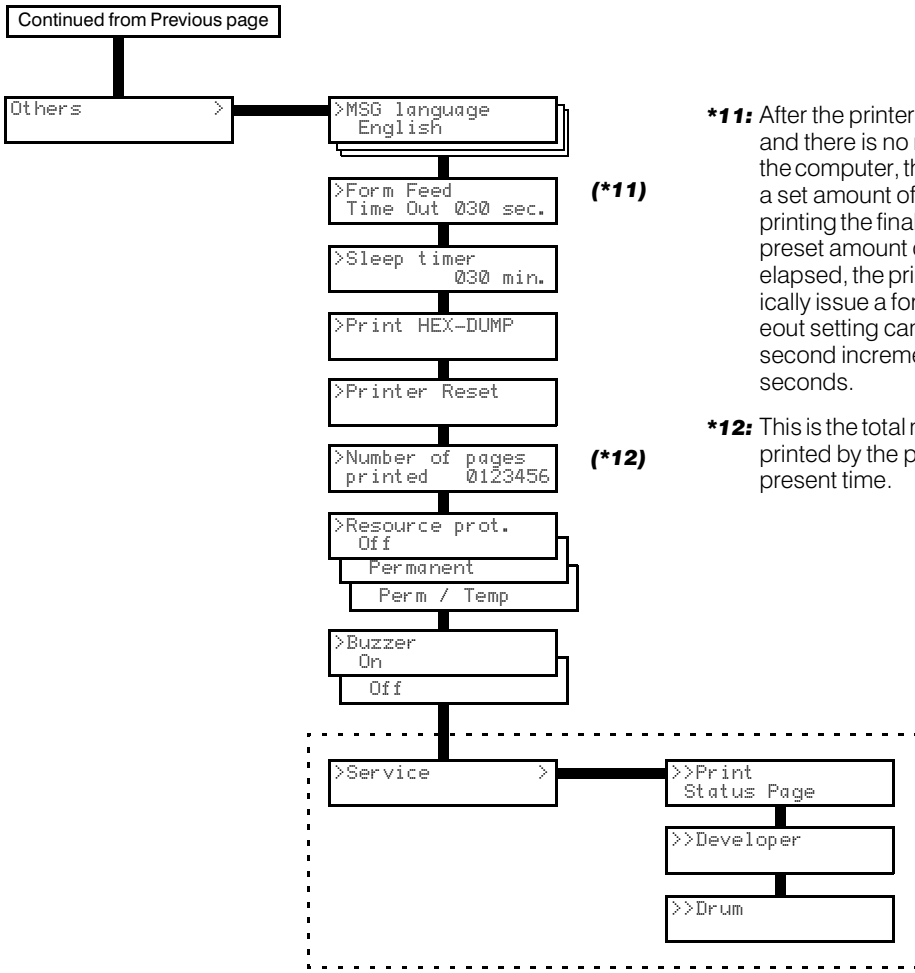

***11:** After the printer accepts all data and there is no more data from the computer, the printer will wait a set amount of time without printing the final page. Once this preset amount of time has elapsed, the printer will automatically issue a form feed. This timeout setting can be set in 5-second increments up to 495 seconds.

***12:** This is the total number of pages printed by the printer up to the present time.